Manufactured Paving / Kellen / Special Flags

Traffic Safety Flags

Shark Tooth 300x300 | 60mm Thick | Without Triangle

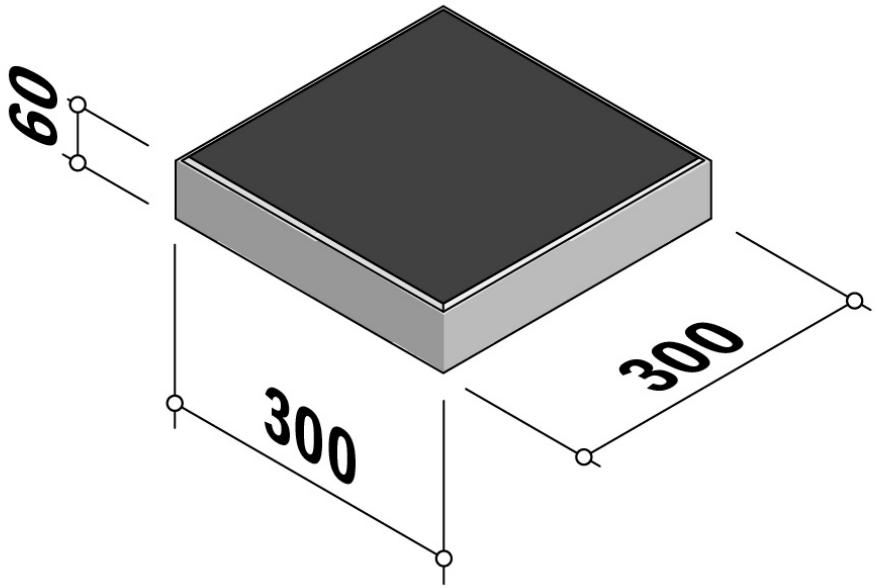

SPECIFICATION

Traffic Safety Flags | Shark Tooth 300x300 | 60mm Thick | Without Triangle

SKU: KEL-FLA-TSA-004

Material	Concrete
Finish	Standard
Size	300(w) x 300(l) x 60(d)
Weight Per Unit	12.69kg
Manufacturing Standard	BS EN 1338:2003
Density	2350 kg/m³
GWP (total) kgCO2e	1.35 kgCO2e/unit
Dutch Ref.	HAAIENTANDTEGELS-30x30x6-zonder driehoek
Quantity per M²	-
Fitted With	Without Triangle
Hole Size	-
Further Information	-

Available in a range of colours, finishes and materials.

Specification & technical data is indicative and subject to change. Images are for illustrative purposes only, details may vary. Some data may vary according to colour / material / finish variation.