Civils & Highways / Traffic Management / Humps & Plateaus

Traffic Plateaus 20mph

1500 Sinusoidal 120 | 120-240x1500 | L-500

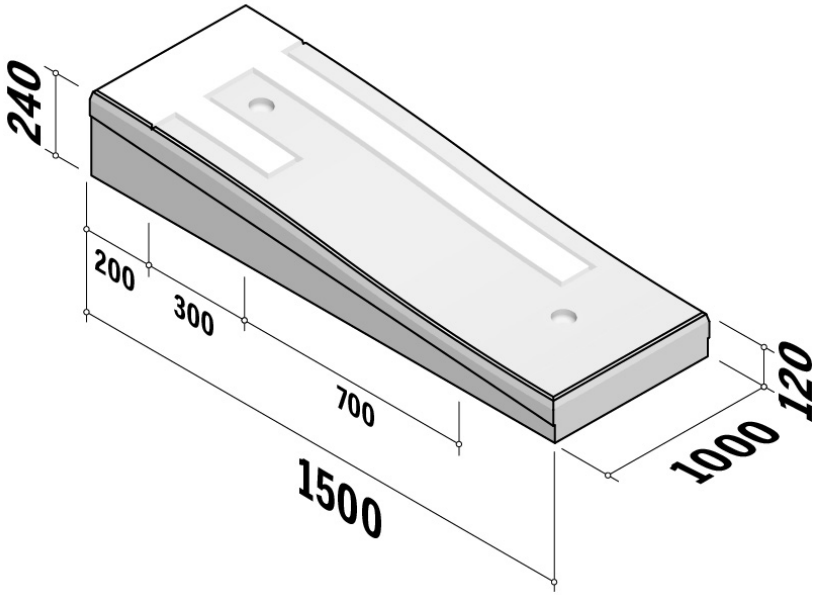

SPECIFICATION

Traffic Plateaus 20mph | 1500 Sinusoidal 120 | 120-240x1500 | L-500

SKU: TMA-HPL-TP3-007

Material	Concrete, Kellen
Finish	ZVB, Lavaro
Size	500(l) x 120-240(w) x 1500(d)
Weight Per Unit	317kg
Manufacturing Standard	BS EN 1340:2003
Density	2350 kg/m³
GWP (total) kgCO2e	33.78 kgCO2e/unit
Dutch Ref.	PLATEAUDREMPELS 150 SINUS 12 CM-12-24x150xL50
Type	-
End Style	-
Position	-
Radius	-
Number Per 360	-
Cross Section	-
Further Information	With wear-resistant white concrete marking. Lifting provision: 2x spherical-head anchor 1.3 t.

Available in a range of colours

Specification & technical data is indicative and subject to change. Images are for illustrative purposes only, details may vary. Some data may vary according to colour / material / finish variation.