Civils & Highways / Traffic Management / Humps & Plateaus

Traffic Hump 30mph

3000 Sinusoidal 80 | 160-240x3000 | L-1000 | Right

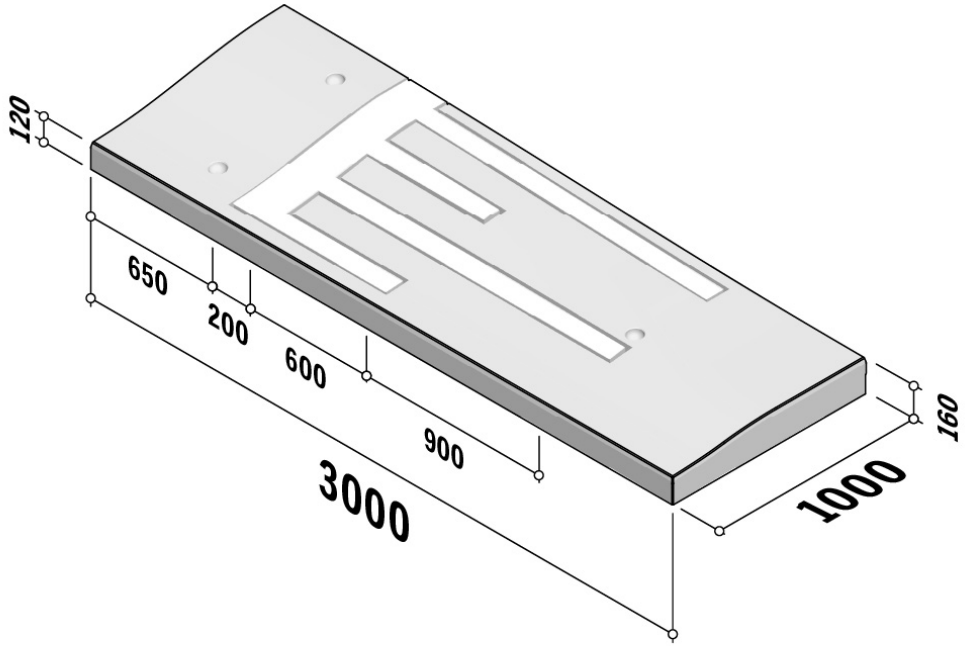

SPECIFICATION

Traffic Hump 30mph | 3000 Sinusoidal 80 | 160-240x3000 | L-1000 | Right

SKU: TMA-HPL-TH3-004

Material	Concrete, Kellen
Finish	ZVB, Lavaro
Size	1000(l) x 160-240(w) x 3000(d)
Weight Per Unit	1440kg
Manufacturing Standard	BS EN 1340:2003
Density	2350 kg/m³
GWP (total) kgCO2e	153.44 kgCO2e/unit
Dutch Ref.	VERKEERSDREMPELS 300 SINUS 8 CM-16-24x300xL100-Right
Type	-
End Style	-
Position	Right
Radius	-
Number Per 360	-
Cross Section	-
Further Information	With wear-resistant white concrete marking. Lifting provision: 3x spherical-head anchor 1.3 t.

Available in a range of colours

Specification & technical data is indicative and subject to change. Images are for illustrative purposes only, details may vary. Some data may vary according to colour / material / finish variation.