HARDSCAPE PRODUCTS

hardscapeproducts.co.uk
01204 565 500
products@hardscape.co.uk

elementale from HARDSCAPE

Street Furniture / Elementale / Solid Benches

Solid Double Sided

Radius External | 500-450x500 | L1700 | 6.5m

SPECIFICATION

Solid Double Sided | Radius External | 500-450x500 | L1700 | 6.5m

SKU: ELE-SBE-SDS-015

Material	Concrete, Kellen
Finish	ZVB, Lavaro
Size	500-450(w) x 500(h) x 1700(l)
Seat Height	450
Weight Per Unit	875kg
Manufacturing Standard	BS EN 1340:2003
Density	2350 kg/m3
GWP (total) kgCO2e	93.23 kgCO2e/unit
Dutch Ref.	SOLID TWEEZIJDIG BOCHT-50-40x50xL170-6.5m
Type	Radius External
Profile	500-450x500
Position	-
Return Angle	-
Radius	6.5m
Number Per 360	24
End Style	-
Cross Section	-
Further Information	Lavaro finishes are applied to the top and both front faces of each unit. Lavaro finishes can be applied to the sides of the units on special request.

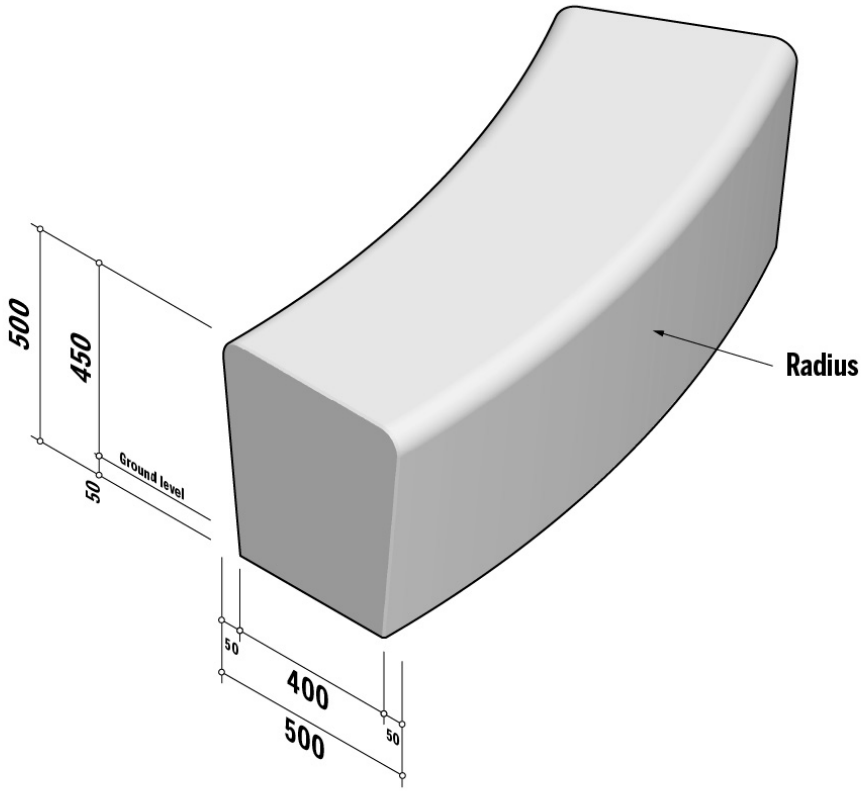

Available in a range of colours

View product online at : https://hardscape.co.uk/product/Solid-Double-Sided-Radius-External-500-450x500-L1700-6-5m/

Specification & technical data is indicative and subject to change. Images are for illustrative purposes only, details may vary. Some data may vary according to colour / material / finish variation.