Civils & Highways / Traffic Management / Roundabouts & Islands

Roundabout Plateaus

2200 Rib Radius External | 2200x300 | L-2350 | 10.5m

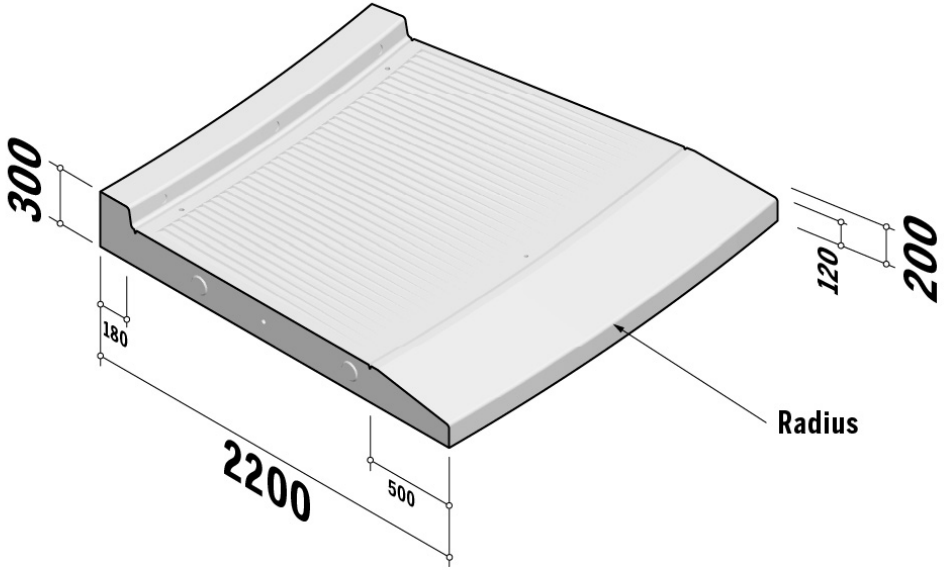

SPECIFICATION

Roundabout Plateaus | 2200 Rib Radius External | 2200x300 | L-2350 | 10.5m

SKU: TMA-RIS-RPL-002

Material	Concrete
Finish	ZVB
Size	2350(l) x 2200(w) x 300(d)
Weight Per Unit	2226kg
Manufacturing Standard	BS EN 1340:2003
Density	2350 kg/m³
GWP (total) kgCO2e	237.19 kgCO2e/unit
Dutch Ref.	ROTONDEPLATEAUS 220 RIBBELMOTIEF-Radius External-220x30xL235-10.5m
Type	RadiusExternal
End Style	-
Position	-
Radius	10.5m
Number Per 360	28
Cross Section	-
Further Information	Hoist: 3 x M20. Equipped with 3 eye reflectors.

Available in a range of colours

Specification & technical data is indicative and subject to change. Images are for illustrative purposes only, details may vary. Some data may vary according to colour / material / finish variation.