Civils & Highways / Traffic Management / Roundabouts & Islands

Roundabout Block

Radius External | 500x200 | L-500 | 8.00-10.00m

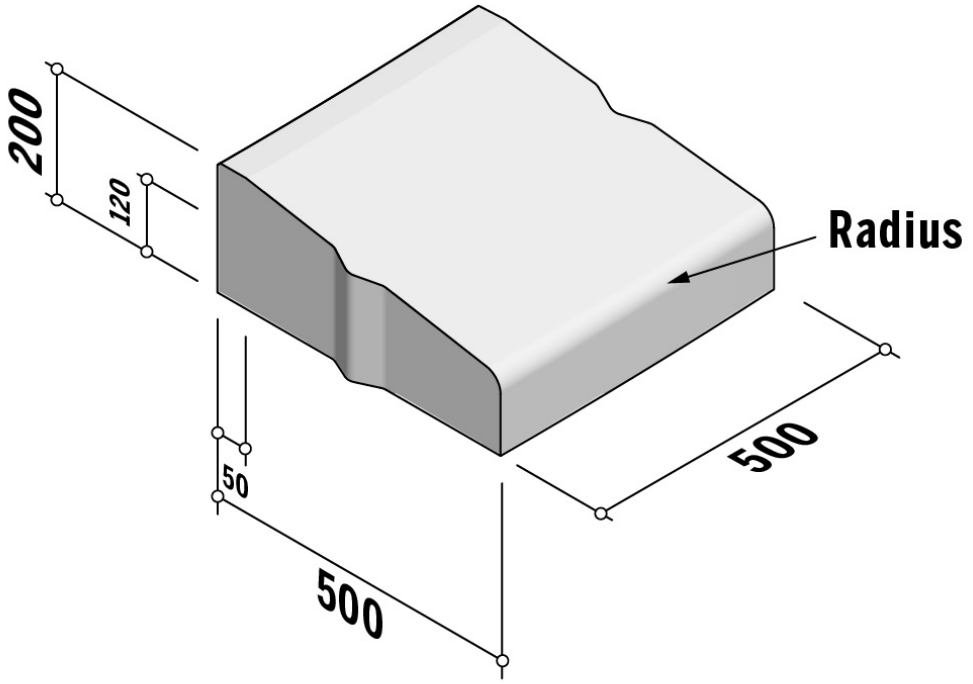

SPECIFICATION

Roundabout Block | Radius External | 500x200 | L-500 | 8.00-10.00m

SKU: TMA-RIS-RKB-006

Material	Concrete, Kellen
Finish	Standard, Lavaro
Size	500(l) x 500(w) x 200(d)
Weight Per Unit	90.61kg
Manufacturing Standard	BS EN 1340:2003
Density	2350 kg/m³
GWP (total) kgCO2e	9.65 kgCO2e/unit
Dutch Ref.	ROTONDEBLOKKEN-Radius External-50x20xL50-8.00-10.00m-VB
Type	RadiusExternal
End Style	VB
Position	-
Radius	8.00-10.00m
Number Per 360	101-126
Cross Section	-
Further Information	-

Available in a range of colours

Specification & technical data is indicative and subject to change. Images are for illustrative purposes only, details may vary. Some data may vary according to colour / material / finish variation.