hardscapeproducts.co.uk
01204 565 500
products@hardscape.co.uk

Park Benches

Small | Beam Seat | 500x460 | L1750

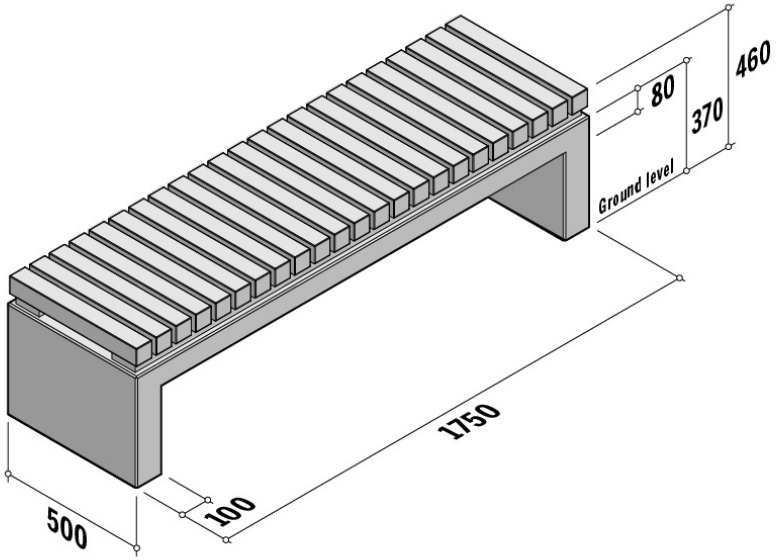

SPECIFICATION

Park Benches | Small | Beam Seat | 500x460 | L1750

SKU: ELE-OBT-PBE-003

Material	Concrete, Wood
Finish	ZVB, SVI Hardwood, SVI Bamboo
Size	500(w) x 460(h) x 1750(l)
Seat Height	460
Weight Per Unit	283kg
Manufacturing Standard	BS EN 1338:2003
Density	2350 kg/m3
GWP (total) kgCO2e	30.15 kgCO2e/unit
Dutch Ref.	PARKBANK KLEIN MET BALKEN ZITTING-50x46xL175
Type	-
Profile	500x460
Position	-
Return Angle	-
Radius	-
Number Per 360	-
End Style	-
Cross Section	-
Further Information	Available with a matching planter and tables.

Available in a range of colours

Specification & technical data is indicative and subject to change. Images are for illustrative purposes only, details may vary. Some data may vary according to colour / material / finish variation.