HARDSCAPE PRODUCTS

hardscapeproducts.co.uk
01204 565 500
products@hardscape.co.uk

elementale from HARDSCAPE

Street Furniture / Elementale / Open Benches & Tables

Park Benches

Medium | Beam Seat | 400x460 | L2420

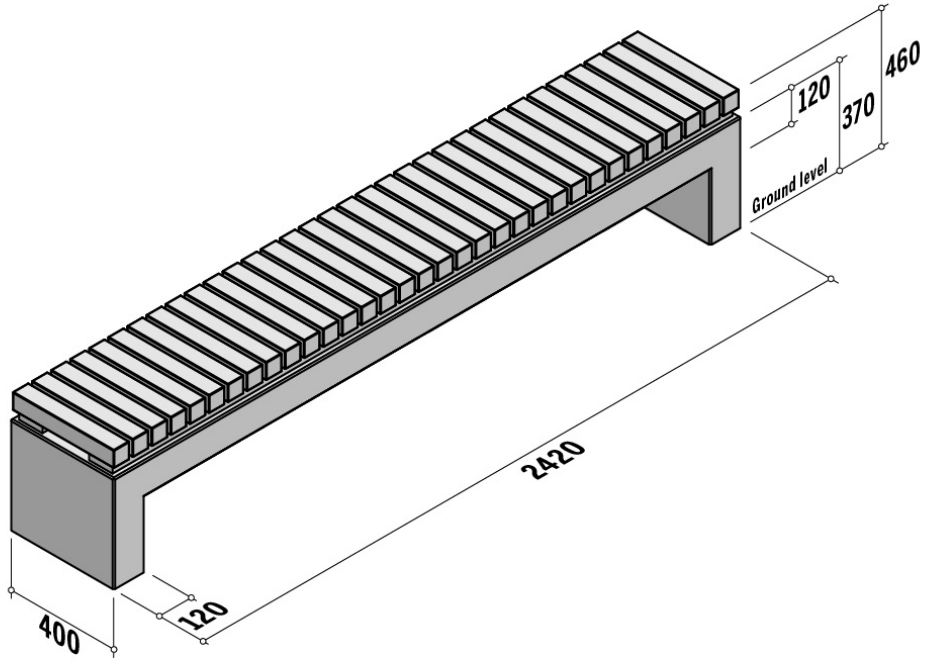

SPECIFICATION

Park Benches | Medium | Beam Seat | 400x460 | L2420

SKU: ELE-OBT-PBE-013

Material	Concrete, Wood
Finish	ZVB, SVI Hardwood, SVI Bamboo
Size	400(w) x 460(h) x 2420(l)
Seat Height	460
Weight Per Unit	375kg
Manufacturing Standard	BS EN 1338:2003
Density	2350 kg/m3
GWP (total) kgCO2e	39.96 kgCO2e/unit
Dutch Ref.	PARKBANK MIDDEL MET BALKEN ZITTING-40x46xL242
Type	-
Profile	400x460
Position	-
Return Angle	-
Radius	-
Number Per 360	-
End Style	-
Cross Section	-
Further Information	Available with a matching planter and tables.

Available in a range of colours

Specification & technical data is indicative and subject to change. Images are for illustrative purposes only, details may vary. Some data may vary according to colour / material / finish variation.