hardscapeproducts.co.uk
01204 565 500
products@hardscape.co.uk

Modular Islands

Side Guides 2500 | 2500x140 | L-2210 | Left

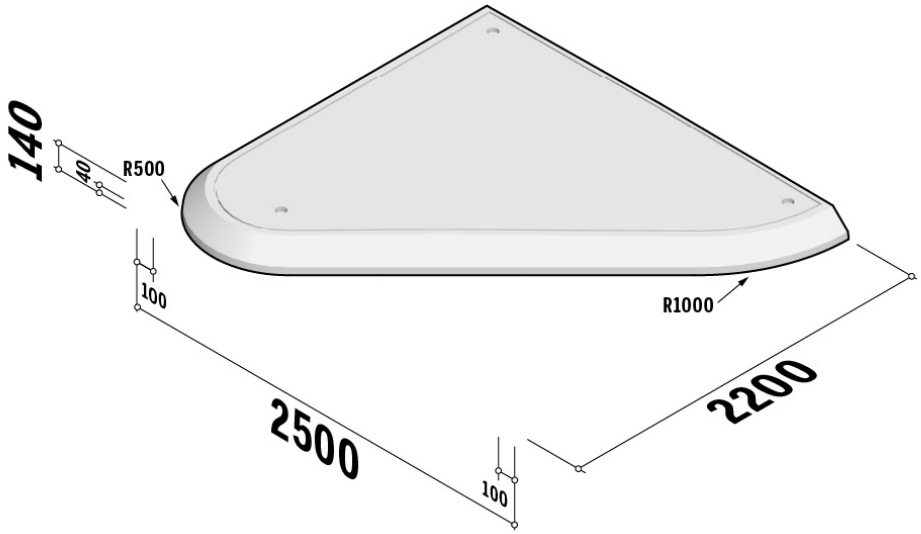

SPECIFICATION

Modular Islands | Side Guides 2500 | 2500x140 | L-2210 | Left

SKU: TMA-RIS-MIS-046

Material	Concrete, Kellen
Finish	ZVB, Lavaro
Size	2210(l) x 2500(w) x 140(d)
Weight Per Unit	1248kg
Manufacturing Standard	BS EN 1340:2003
Density	2350 kg/m³
GWP (total) kgCO2e	132.98 kgCO2e/unit
Dutch Ref.	ZIJGELEIDERS-250x14xL221-Left
Type	-
End Style	-
Position	Left
Radius	-
Number Per 360	-
Cross Section	-
Further Information	Hoist: 4x M20.

Available in a range of colours

Specification & technical data is indicative and subject to change. Images are for illustrative purposes only, details may vary. Some data may vary according to colour / material / finish variation.