hardscapeproducts.co.uk
01204 565 500
products@hardscape.co.uk

Link

End | 187 | Wooden Seat | 500x450 | L1870 | Left

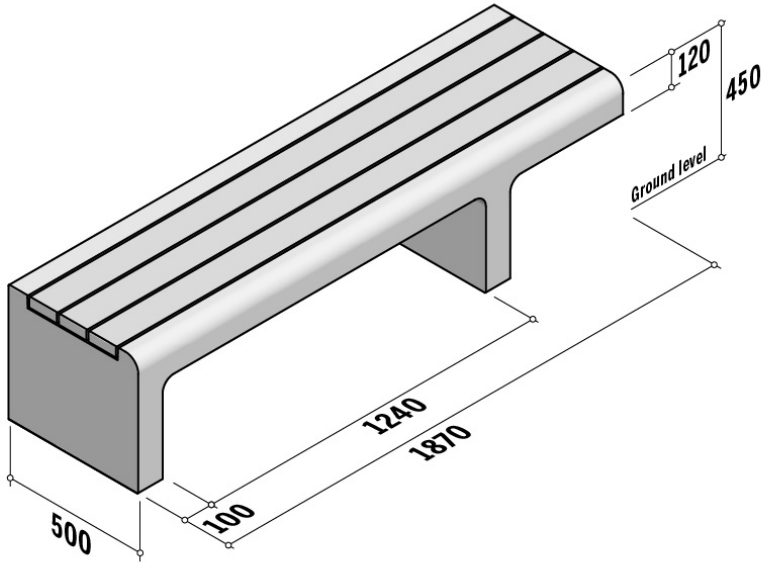

SPECIFICATION

Link | End | 187 | Wooden Seat | 500x450 | L1870 | Left

SKU: ELE-OBT-LIN-011

Material	Concrete, Wood
Finish	ZVB, SVI Hardwood
Size	500(w) x 450(h) x 1870(l)
Seat Height	450
Weight Per Unit	335kg
Manufacturing Standard	BS EN 1338:2003
Density	2350 kg/m3
GWP (total) kgCO2e	35.7 kgCO2e/unit
Dutch Ref.	LINK BANK 187 LINKS MET HOUTEN ZITTING-50x45xL187-LINKS
Type	End
Profile	500x450
Position	Left
Return Angle	-
Radius	-
Number Per 360	-
End Style	-
Cross Section	-
Further Information	Optional extra extended leg for in-ground installation.

Available in a range of colours

Specification & technical data is indicative and subject to change. Images are for illustrative purposes only, details may vary. Some data may vary according to colour / material / finish variation.