Street Furniture / Elementale / Solid Benches

Greenline

Straight | A1 450 Seat | 4 Slats Hardwood | 410-450x750 | L2000

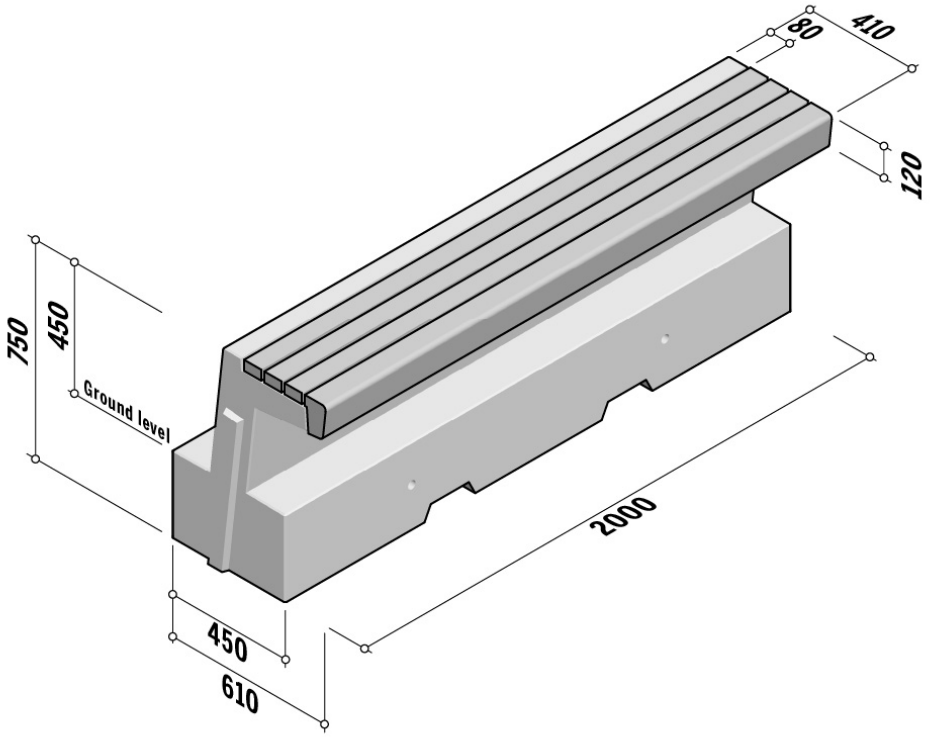

SPECIFICATION

Greenline | Straight | A1 450 Seat | 4 Slats Hardwood | 410-450x750 | L2000

SKU: ELE-SBE-GRE-061

Material	Concrete, Wood
Finish	ZVB, SVI Hardwood
Size	410-450(w) x 750(h) x 2000(l)
Seat Height	450
Weight Per Unit	1152kg
Manufacturing Standard	BS EN 1340:2003
Density	2350 kg/m3
GWP (total) kgCO2e	122.75 kgCO2e/unit
Dutch Ref.	GRS-A1 450 ZIT-41-45x75xL200 4 latten FSC 100% hardhout
Type	Straight
Profile	410-450x750
Position	-
Return Angle	-
Radius	-
Number Per 360	-
End Style	-
Cross Section	-
Further Information	Hoist: 4x M16 threaded sleeves. The underside is equipped with two 15 cm wide fork recesses.

Available in a range of colours

Specification & technical data is indicative and subject to change. Images are for illustrative purposes only, details may vary. Some data may vary according to colour / material / finish variation.