HARDSCAPE PRODUCTS

hardscapeproducts.co.uk
01204 565 500
products@hardscape.co.uk

elementale from HARDSCAPE

Street Furniture / Elementale / Solid Benches

Greenline

Return External | 300 | 150-450x600 | L1000 | 90°

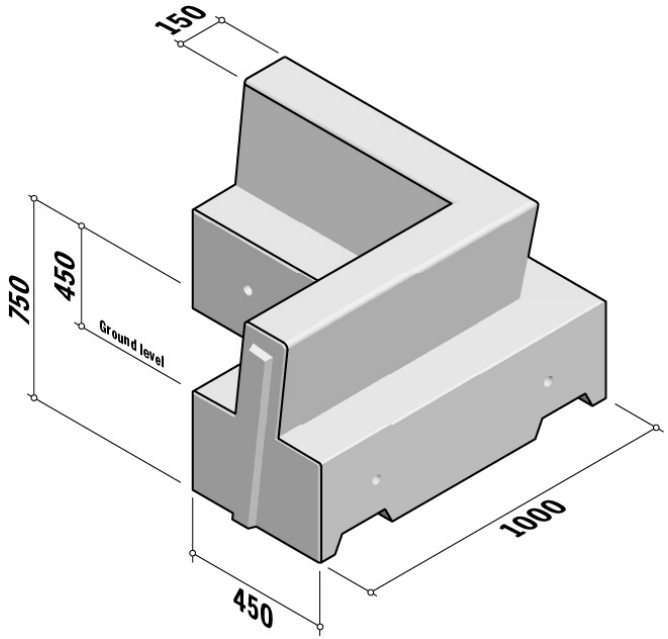

SPECIFICATION

Greenline | Return External | 300 | 150-450x600 | L1000 | 90°

SKU: ELE-SBE-GRE-082

Material	Concrete
Finish	ZVB
Size	150-450(w) x 600(h) x 1000(l)
Seat Height	450
Weight Per Unit	668kg
Manufacturing Standard	BS EN 1340:2003
Density	2350 kg/m3
GWP (total) kgCO2e	71.18 kgCO2e/unit
Dutch Ref.	GRH-300 HOEK-15-45x60xL100-90°
Type	Return External
Profile	150-450x600
Position	-
Return Angle	90°
Radius	-
Number Per 360	-
End Style	-
Cross Section	-
Further Information	Hoist: 4x M16 threaded sleeves. The underside is equipped with two 15 cm wide fork recesses.

Available in a range of colours

Specification & technical data is indicative and subject to change. Images are for illustrative purposes only, details may vary. Some data may vary according to colour / material / finish variation.