hardscapeproducts.co.uk
01204 565 500
products@hardscape.co.uk

Greenline

End | 300 | 150-450x600 | L2000 | Right

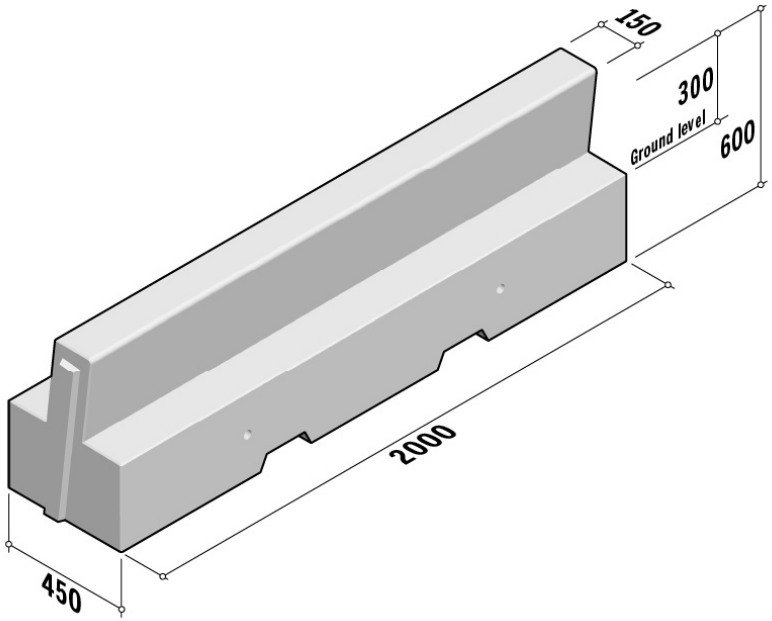

SPECIFICATION

Greenline | End | 300 | 150-450x600 | L2000 | Right

SKU: ELE-SBE-GRE-071

Material	Concrete
Finish	ZVB
Size	150-450(w) x 600(h) x 2000(l)
Seat Height	450
Weight Per Unit	864kg
Manufacturing Standard	BS EN 1340:2003
Density	2350 kg/m3
GWP (total) kgCO2e	92.06 kgCO2e/unit
Dutch Ref.	GRE-300 EIND-15-45x60xL200-EINDSTUK RECHTS
Type	End
Profile	150-450x600
Position	Right
Return Angle	-
Radius	-
Number Per 360	-
End Style	-
Cross Section	-
Further Information	-

Available in a range of colours

Specification & technical data is indicative and subject to change. Images are for illustrative purposes only, details may vary. Some data may vary according to colour / material / finish variation.