CREATIVE LANDSCAPING WORKS

074 920 5039
info@creativelandscapingworks.com
www.creativelandscapingworks.com

kellen from HARDSCAPE

Manufactured Paving / Kellen / Double XL Slabs

Double XL Sport

Antislip | 1995x495x120

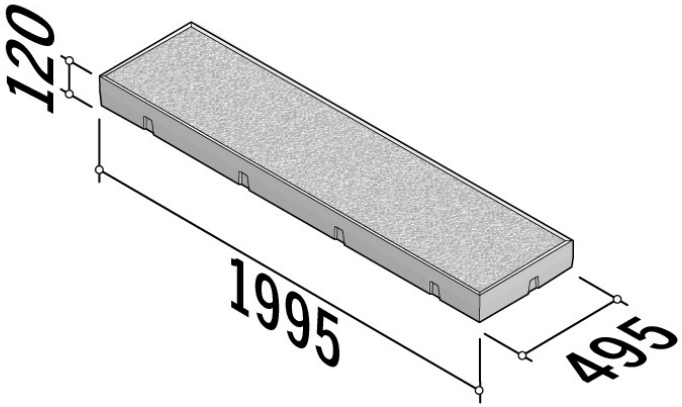

SPECIFICATION

Double XL Sport | Antislip | 1995x495x120

SKU: KEL-SLA-DXS-001

Material	Concrete
Finish	RAS Anti-Slip DXL
Size	1995(w) x 495(l) x 120(d)
Weight Per Unit	300kg
Manufacturing Standard	BS EN 1338:2003
Density	2350 kg/m³
GWP (total) kgCO2e	31.97 kgCO2e/unit
Dutch Ref.	VLOERPLAAT RICHTINGLOZE ANTISLIP STRUCTUUR (RAS) SPORT-199.5x49.5x12
Position	-
Radius	-
Edge Style	5x5mm
Fitted With	Without lifting tubes, installation via vacuum lifting only.
Further Information	Single mesh non-structural reinforcement. VOSB load class 300; Axle Loads 10 tonnes; Forklift (solid tires) 7.5 tonnes; Forklift (pneumatic tires) 9 tonnes; Point loads 5 tonnes

Available in a range of colours

Specification & technical data is indicative and subject to change. Images are for illustrative purposes only, details may vary. Some data may vary according to colour / material / finish variation.