CREATIVE LANDSCAPING WORKS

074 920 5039
info@creativelandscapingworks.com
www.creativelandscapingworks.com

kellen from HARDSCAPE

Manufactured Paving / Kellen / Double XL Slabs

Double XL Drainage

Open Gutter Liquid Tight | 495x200x995

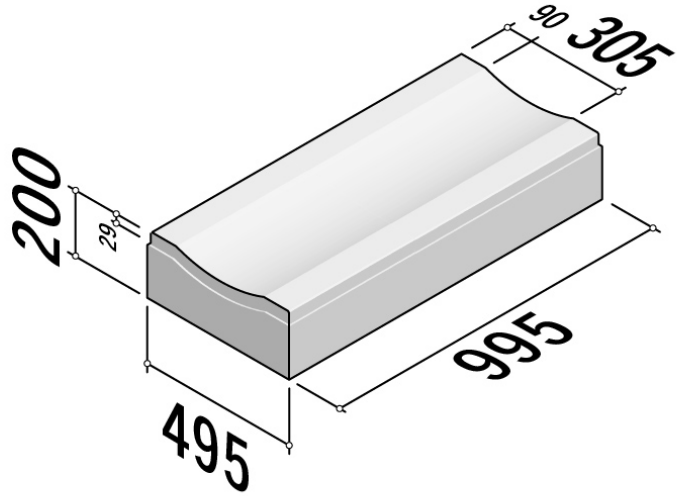

SPECIFICATION

Double XL Drainage | Open Gutter Liquid Tight | 495x200x995

SKU: KEL-SLA-DXD-030

Material	Concrete
Finish	Standard DXL
Size	495(w) x 995(l) x 200(d)
Weight Per Unit	222kg
Manufacturing Standard	BS EN 1338:2003
Density	2350 kg/m³
GWP (total) kgCO2e	23.65 kgCO2e/unit
Dutch Ref.	OPEN GOOT VLOEISTOFDICHT-49.5x20x99.5
Position	-
Radius	-
Edge Style	-
Fitted With	Without lifting tubes. To be installed with a lifting clamp.
Further Information	-

Available in a range of colours

Specification & technical data is indicative and subject to change. Images are for illustrative purposes only, details may vary. Some data may vary according to colour / material / finish variation.