Manufactured Paving / Kellen / Special Flags

Cutout Flags

Cutout 300x450 | 80mm Thick | Oval 370x270mm

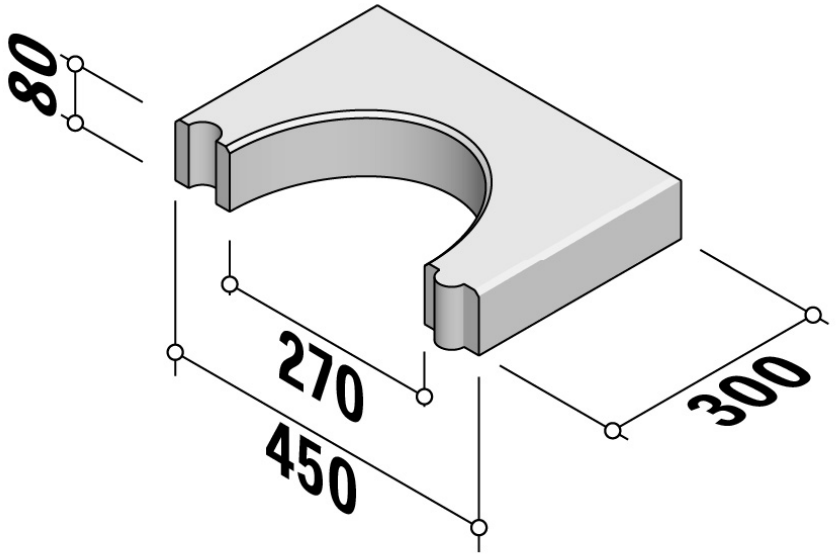

SPECIFICATION

Cutout Flags | Cutout 300x450 | 80mm Thick | Oval 370x270mm

SKU: KEL-FLA-CUT-015

Material	Concrete
Finish	Standard
Size	300(w) x 450(l) x 80(d)
Weight Per Unit	17.5kg
Manufacturing Standard	BS EN 1338:2003
Density	2350 kg/m³
GWP (total) kgCO2e	1.86 kgCO2e/unit
Dutch Ref.	SPARINGTEGELS-45x30x8-Oval 37x27
Quantity per M²	-
Fitted With	-
Hole Size	Oval 370x270mm
Further Information	-

Available in a range of colours, finishes and materials.

Specification & technical data is indicative and subject to change. Images are for illustrative purposes only, details may vary. Some data may vary according to colour / material / finish variation.