Manufactured Paving / Kellen / Blocks

Blocks 150

150x300 | 62mm Thick

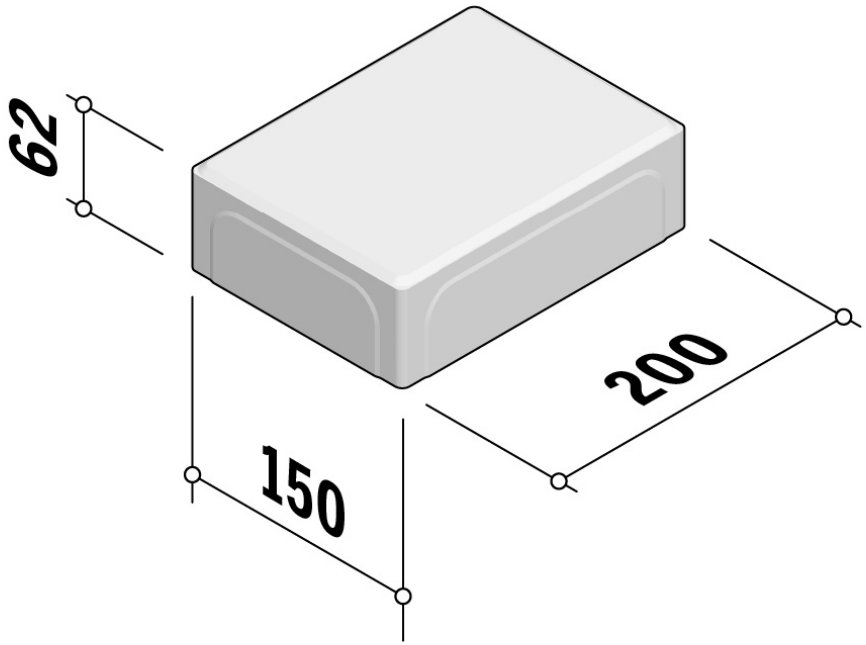

SPECIFICATION

Blocks 150 | 150x300 | 62mm Thick

SKU: KEL-BLO-150-003

Material	Concrete, Kellen
Finish	Standard, Optiflex, Lavaro, Breccia, Sferio, Liscio, Lucida
Size	150(w) x 300(l) x 62(d)
Weight Per Unit	6.35kg
Manufacturing Standard	BS EN 1339:2003
Density	2350 kg/m³
GWP (total) kgCO2e	0.68 kgCO2e/unit
Dutch Ref.	BETONSTRAATSTENEN-30x15x6.2
Quantity per M²	22
Growable Surface	-
Further Information	Available in a machine layable pack - running or block(stack/ basketweave) bond pattern.

Available in a range of colours, finishes and materials.

Specification & technical data is indicative and subject to change. Images are for illustrative purposes only, details may vary. Some data may vary according to colour / material / finish variation.