hardscapeproducts.co.uk
01204 565 500
products@hardscape.co.uk

Segregator 220-440

220-440x250 | Straight | L-1000 | Middle | Splay | DVB

SPECIFICATION

Segregator 220-440 | 220-440x250 | Straight | L-1000 | Middle | Splay | DVB

SKU: ATK-SEG-009-6723

Material	Concrete, Kellen
Finish	Standard, Optiflex, Lavaro
Size	220-440(w) x 250(d) x 1000(l)
Weight Per Unit	226kg
Manufacturing Standard	BS EN 1340:2003
Density	2350 kg/m³
GWP (total) kgCO2e	24.08 kgCO2e/unit
Dutch Ref.	SCHEIDINGSBANDEN-22-44x25xL100-DVB-MIDDEN
Type	Straight
End Style	DVB
Profile	220-440x250
Position	Middle
Face	Splay
Face Angle	48°
Return Angle	-
Radius	-
Number per 360	-
Slope Angle	-
Slope Gradient	-

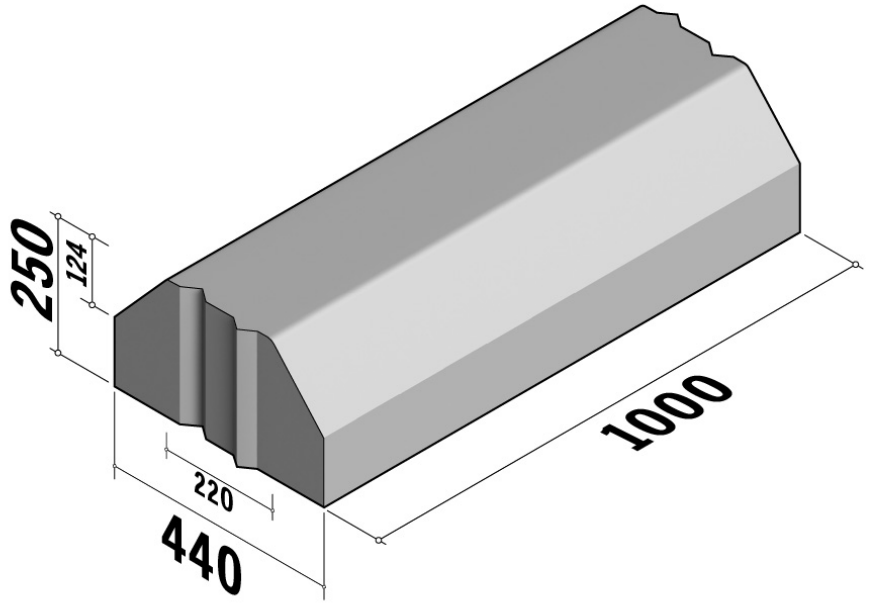

Active Travel Kerbs are available in a range of colours, finishes and materials.

Specification & technical data is indicative and subject to change. Images are for illustrative purposes only, details may vary. Some data may vary according to colour / material / finish variation.