hardscapeproducts.co.uk
01204 565 500
products@hardscape.co.uk

Segregator 110/220-130/150

120-250x200 | Straight | L-1000 | Middle | Splay-Half-Battered | VB

SPECIFICATION

Segregator 110/220-130/150 | 120-250x200 | Straight | L-1000 | Middle | Splay-Half-Battered | VB

SKU: ATK-SEG-005-6705

Material	Concrete, Kellen
Finish	Standard, Optiflex, Lavaro
Size	120-250(w) x 200(d) x 1000(l)
Weight Per Unit	95kg
Manufacturing Standard	BS EN 1340:2003
Density	2350 kg/m³
GWP (total) kgCO2e	10.12 kgCO2e/unit
Dutch Ref.	SCHEIDINGSBANDEN-11/22-13/15x20xL100-VB-MIDDEN
Type	Straight
End Style	VB
Profile	120-250x200
Position	Middle
Face	Splay-Half-Battered
Face Angle	47°
Return Angle	-
Radius	-
Number per 360	-
Slope Angle	-
Slope Gradient	-

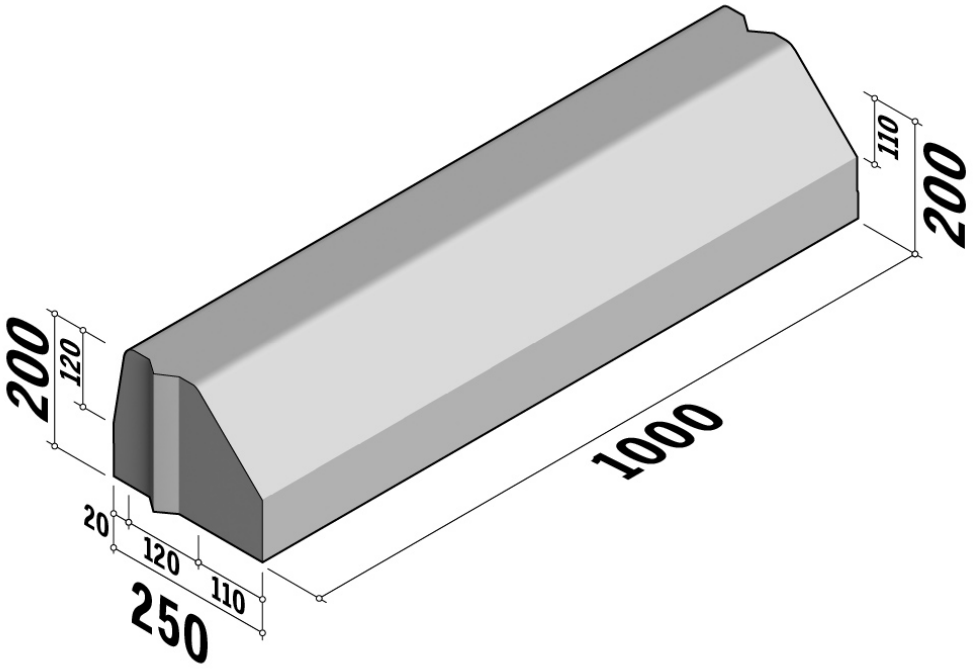

Active Travel Kerbs are available in a range of colours, finishes and materials.

Specification & technical data is indicative and subject to change. Images are for illustrative purposes only, details may vary. Some data may vary according to colour / material / finish variation.