HARDSCAPE PRODUCTS

hardscapeproducts.co.uk
01204 565 500
products@hardscape.co.uk

Active Travel Kerbs from HARDSCAPE

Civils & Highways / Active Travel Kerbs / Segregator

Segregator 50-250

50-250x120 | Straight | L-1000 | Middle | Splay | SQ

SPECIFICATION

Segregator 50-250 | 50-250x120 | Straight | L-1000 | Middle | Splay | SQ
SKU: ATK-SEG-001-6698

Material	Concrete, Kellen
Finish	Standard Wet Cast, Optiflex, Lavaro
Size	50-250(w) x 120(d) x 1000(l)
Weight Per Unit	49.4kg
Manufacturing Standard	BS EN 1340:2003
Density	2350 kg/m³
GWP (total) kgCO2e	5.26 kgCO2e/unit
Dutch Ref.	SCHEIDINGSBANDEN-5-25x12xL100-VL-MIDDEN
Type	Straight
End Style	SQ
Profile	50-250x120
Position	Middle
Face	Splay
Face Angle	39°
Return Angle	-
Radius	-
Number per 360	-
Slope Angle	-
Slope Gradient	-

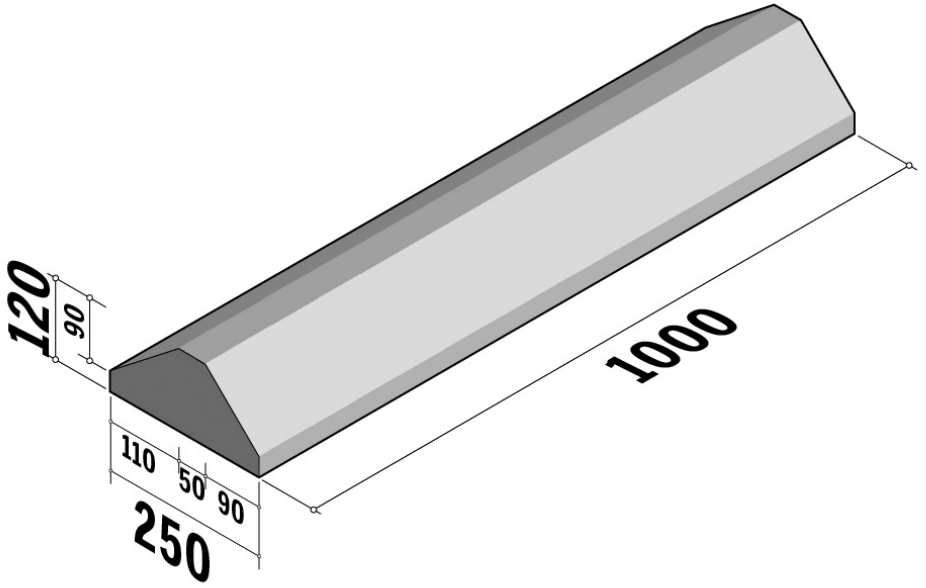

Active Travel Kerbs are available in a range of colours, finishes and materials.

View product online at : https://hardscape.co.uk/product/Segregator-50-250-50-250x120-Straight-L-1000-Middle-Splay-SQ/

Specification & technical data is indicative and subject to change. Images are for illustrative purposes only, details may vary. Some data may vary according to colour / material / finish variation.