hardscapeproducts.co.uk
01204 565 500
products@hardscape.co.uk

Reflector 180-200

180-200x250 | Radius | L-785 | External | 10m | Half-Battered | HD

SPECIFICATION

Reflector 180-200 | 180-200x250 | Radius | L-785 | External | 10m | Half-Battered | HD
SKU: ATK-RFL-003-6857

Material	Concrete, Kellen
Finish	Standard Wet Cast, Optiflex, Lavaro
Size	180-200(w) x 250(d) x 785(l)
Weight Per Unit	87.63kg
Manufacturing Standard	BS EN 1340:2003
Density	2350 kg/m³
GWP (total) kgCO2e	9.34 kgCO2e/unit
Dutch Ref.	OOGREFLECTORBOCHTBANDEN-18-20x25xL78.5-10m-HD
Type	Radius External
End Style	HD
Profile	180-200x250
Position	-
Face	Half-Battered
Face Angle	81°
Return Angle	-
Radius	10m
Number per 360	80
Slope Angle	-
Slope Gradient	-

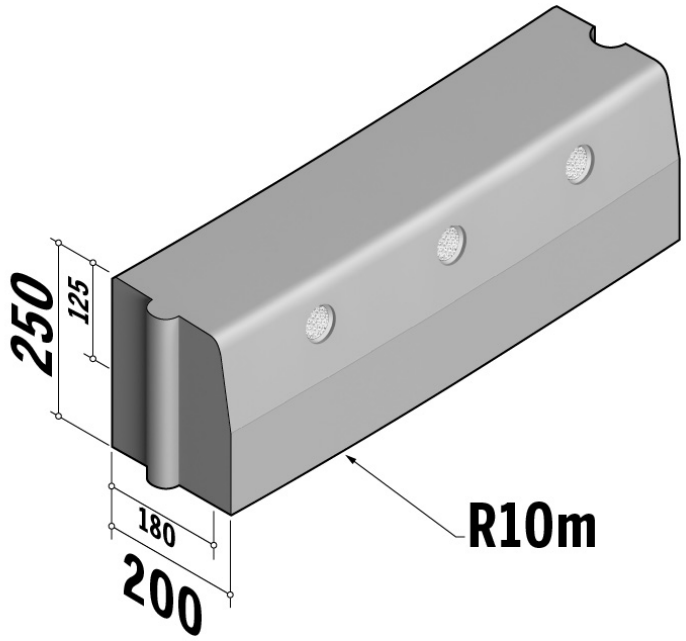

Active Travel Kerbs are available in a range of colours, finishes and materials.

Specification & technical data is indicative and subject to change. Images are for illustrative purposes only, details may vary. Some data may vary according to colour / material / finish variation.