HARDSCAPE PRODUCTS

hardscapeproducts.co.uk
01204 565 500
products@hardscape.co.uk

Active Travel Kerbs from HARDSCAPE

Civils & Highways / Active Travel Kerbs / Reflector

Reflector 130-150

130-150x250 | Radius | L-785 | External | 10m | Half-Battered | HD

SPECIFICATION

Reflector 130-150 | 130-150x250 | Radius | L-785 | External | 10m | Half-Battered | HD

SKU: ATK-RFL-002-6848

Material	Concrete, Kellen
Finish	Standard Wet Cast, Optiflex, Lavaro
Size	130-150(w) x 250(d) x 785(l)
Weight Per Unit	64.66kg
Manufacturing Standard	BS EN 1340:2003
Density	2350 kg/m³
GWP (total) kgCO2e	6.89 kgCO2e/unit
Dutch Ref.	OOGREFLECTORBOCHTBANDEN-13-15x25xL78.5-10m-HD
Type	Radius External
End Style	HD
Profile	130-150x250
Position	-
Face	Half-Battered
Face Angle	81°
Return Angle	-
Radius	10m
Number per 360	80
Slope Angle	-
Slope Gradient	-

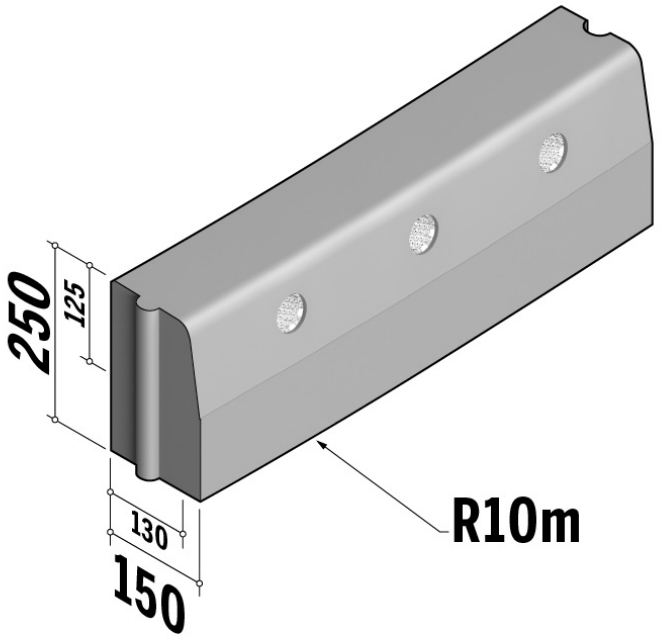

Active Travel Kerbs are available in a range of colours, finishes and materials.

View product online at : https://hardscape.co.uk/product/Reflector-130-150-130-150x250-Radius-L-785-External-10m-Half-Battered-HD/

Specification & technical data is indicative and subject to change. Images are for illustrative purposes only, details may vary. Some data may vary according to colour / material / finish variation.