hardscapeproducts.co.uk
01204 565 500
products@hardscape.co.uk

Highway 480-500x160

480-500x160 | Return Corner | L-500 | External | 90° | Half-Battered | SQ

SPECIFICATION

Highway 480-500x160 | 480-500x160 | Return Corner | L-500 | External | 90° | Half-Battered | SQ

SKU: ATK-HWS-001-6501

Material	Concrete, Kellen
Finish	Standard Wet Cast, Lavaro, Metallo
Size	480-500(w) x 160(d) x 500(l)
Weight Per Unit	88.1kg
Manufacturing Standard	BS EN 1340:2003
Density	2350 kg/m³
GWP (total) kgCO2e	9.39 kgCO2e/unit
Dutch Ref.	HOEKSTUKKEN-48-50x16xL50-90°-VL
Type	Return Corner External
End Style	SQ
Profile	480-500x160
Position	-
Face	Half-Battered
Face Angle	81°
Return Angle	90°
Radius	-
Number per 360	-
Slope Angle	-
Slope Gradient	-

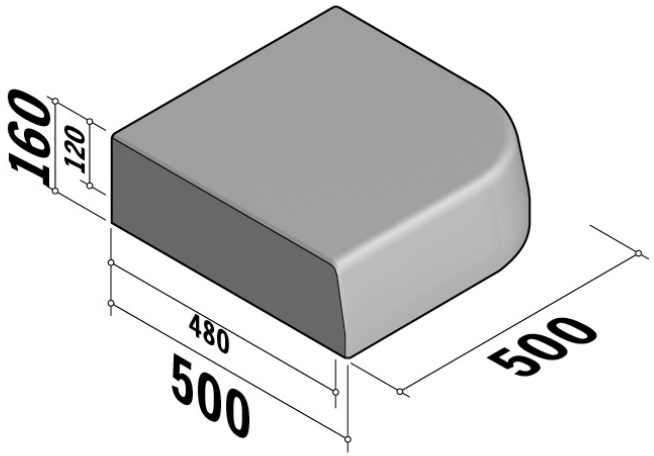

Active Travel Kerbs are available in a range of colours, finishes and materials.

Specification & technical data is indicative and subject to change. Images are for illustrative purposes only, details may vary. Some data may vary according to colour / material / finish variation.