Civils & Highways / Active Travel Kerbs / Highway / Highway 480-500

Highway 480-500x160

480-500x160 | Radius | L-785 | External | 1m | Half-Battered | SQ

SPECIFICATION

Highway 480-500x160 | 480-500x160 | Radius | L-785 | External | 1m | Half-Battered | SQ

SKU: ATK-HWS-001-6478

Material	Concrete, Kellen
Finish	Standard Wet Cast, Lavaro, Metallo
Size	480-500(w) x 160(d) x 785(l)
Weight Per Unit	108.3kg
Manufacturing Standard	BS EN 1340:2003
Density	2350 kg/m³
GWP (total) kgCO2e	11.54 kgCO2e/unit
Dutch Ref.	TROTTOIRBOCHTBANDEN-48-50x16xL78.5-1m-VL
Type	Radius External
End Style	SQ
Profile	480-500x160
Position	-
Face	Half-Battered
Face Angle	81°
Return Angle	-
Radius	1m
Number per 360	8
Slope Angle	-
Slope Gradient	-

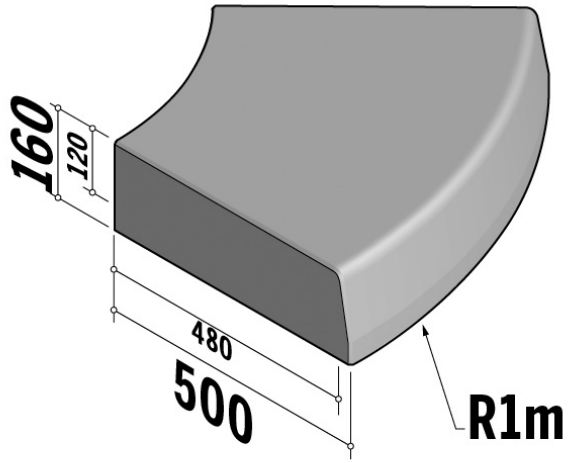

Active Travel Kerbs are available in a range of colours, finishes and materials.

Specification & technical data is indicative and subject to change. Images are for illustrative purposes only, details may vary. Some data may vary according to colour / material / finish variation.