hardscapeproducts.co.uk
01204 565 500
products@hardscape.co.uk

Highway 400x200

400x200 | Platform | L-1000 | Return | Right | Bullnose | VB

SPECIFICATION

Highway 400x200 | 400x200 | Platform | L-1000 | Return | Right | Bullnose | VB

SKU: ATK-HWQ-001-6448

Material	Concrete, Kellen
Finish	Standard Wet Cast, Lavaro, Metallo
Size	400(w) x 200(d) x 1000(l)
Weight Per Unit	186.99kg
Manufacturing Standard	BS EN 1340:2003
Density	2350 kg/m³
GWP (total) kgCO2e	19.92 kgCO2e/unit
Dutch Ref.	PERRONBANDEN-40x20xL100-VB-RECHTS
Type	Platform Return
End Style	VB
Profile	400x200
Position	Right
Face	Bullnose
Face Angle	-
Return Angle	-
Radius	-
Number per 360	-
Slope Angle	-
Slope Gradient	-

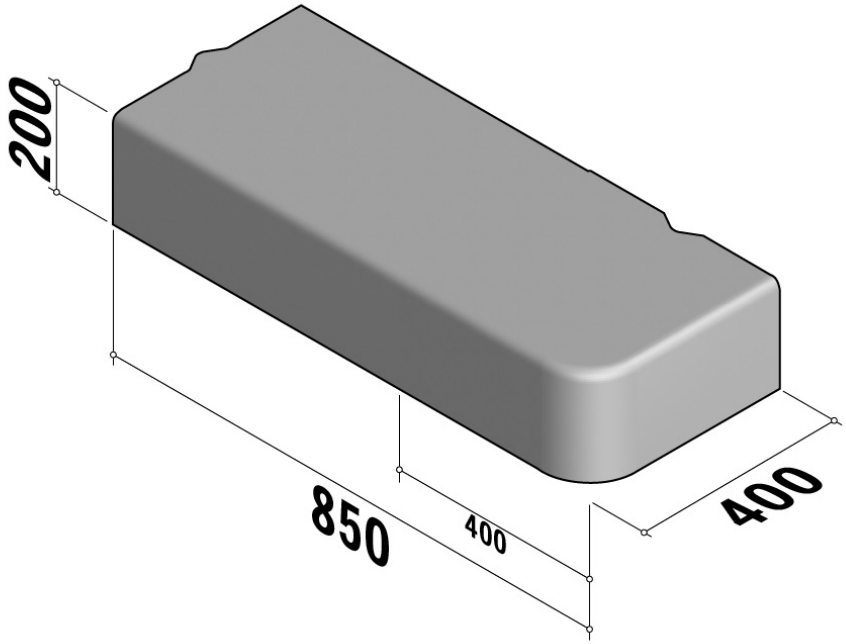

Active Travel Kerbs are available in a range of colours, finishes and materials.

Specification & technical data is indicative and subject to change. Images are for illustrative purposes only, details may vary. Some data may vary according to colour / material / finish variation.