Civils & Highways / Active Travel Kerbs / Highway / Highway 380-400

Highway 380-400x250

380-400x250 | Platform | L-1000 | Return | Right | Half-Battered | SQ

SPECIFICATION

Highway 380-400x250 | 380-400x250 | Platform | L-1000 | Return | Right | Half-Battered | SQ

SKU: ATK-HWP-001-6931

Material	Concrete, Kellen
Finish	Standard, Lavaro
Size	380-400(w) x 250(d) x 1000(l)
Weight Per Unit	219kg
Manufacturing Standard	BS EN 1340:2003
Density	2350 kg/m³
GWP (total) kgCO2e	23.34 kgCO2e/unit
Dutch Ref.	PERRONBANDEN-38-40x25xL100-VL-RECHTS
Type	Platform Return
End Style	SQ
Profile	380-400x250
Position	Right
Face	Half-Battered
Face Angle	81°
Return Angle	-
Radius	-
Number per 360	-
Slope Angle	-
Slope Gradient	-

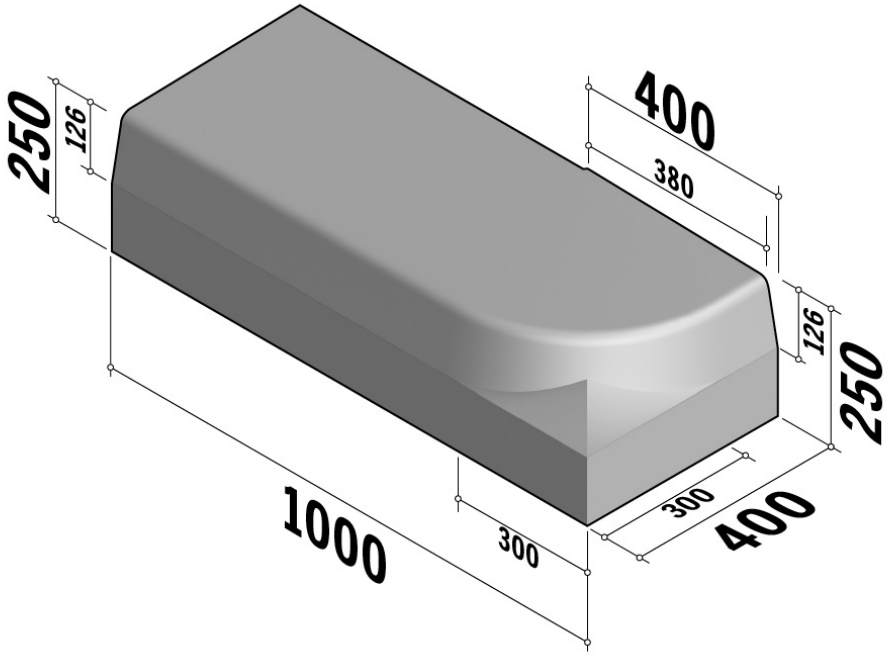

Active Travel Kerbs are available in a range of colours, finishes and materials.

Specification & technical data is indicative and subject to change. Images are for illustrative purposes only, details may vary. Some data may vary according to colour / material / finish variation.