hardscapeproducts.co.uk
01204 565 500
products@hardscape.co.uk

Highway 380-400x250

380-400x250 | Return Corner | L-100 | Internal | 90° | Half-Battered | VB

SPECIFICATION

Highway 380-400x250 | 380-400x250 | Return Corner | L-100 | Internal | 90° | Half-Battered | VB

SKU: ATK-HWP-001-6425

Material	Concrete, Kellen
Finish	Standard Wet Cast, Lavaro
Size	380-400(w) x 250(d) x 100(l)
Weight Per Unit	138kg
Manufacturing Standard	BS EN 1340:2003
Density	2350 kg/m³
GWP (total) kgCO2e	14.7 kgCO2e/unit
Dutch Ref.	HOEKSTUKKEN-38-40x25xL10-90°-VB-inw
Type	Return Corner Internal
End Style	VB
Profile	380-400x250
Position	-
Face	Half-Battered
Face Angle	81°
Return Angle	90°
Radius	-
Number per 360	-
Slope Angle	-
Slope Gradient	-

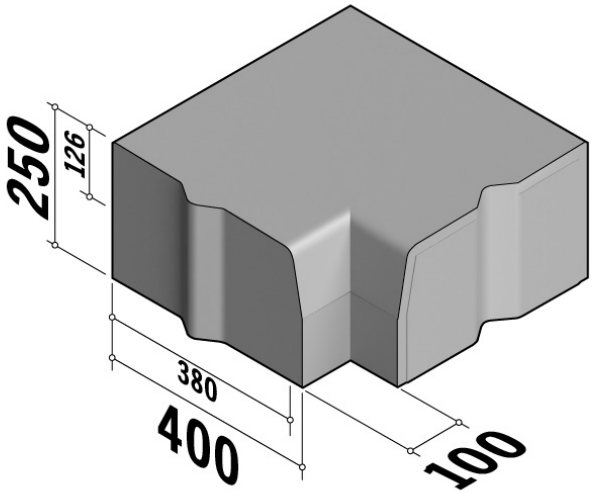

Active Travel Kerbs are available in a range of colours, finishes and materials.

Specification & technical data is indicative and subject to change. Images are for illustrative purposes only, details may vary. Some data may vary according to colour / material / finish variation.