Civils & Highways / Active Travel Kerbs / Highway / Highway 380-400

Highway 380-400x250

380-400x250 | Radius | L-980 | Internal | 10m | Half-Battered | VB

SPECIFICATION

Highway 380-400x250 | 380-400x250 | Radius | L-980 | Internal | 10m | Half-Battered | VB

SKU: ATK-HWP-001-6423

Material	Concrete, Kellen
Finish	Standard, Optiflex, Lavaro, Metallo
Size	380-400(w) x 250(d) x 980(l)
Weight Per Unit	226kg
Manufacturing Standard	BS EN 1340:2003
Density	2350 kg/m³
GWP (total) kgCO2e	24.08 kgCO2e/unit
Dutch Ref.	TROTTOIRBOCHTBANDEN-38-40x25xL98-10m-VB-inw
Type	Radius Internal
End Style	VB
Profile	380-400x250
Position	-
Face	Half-Battered
Face Angle	81°
Return Angle	-
Radius	10m
Number per 360	64
Slope Angle	-
Slope Gradient	-

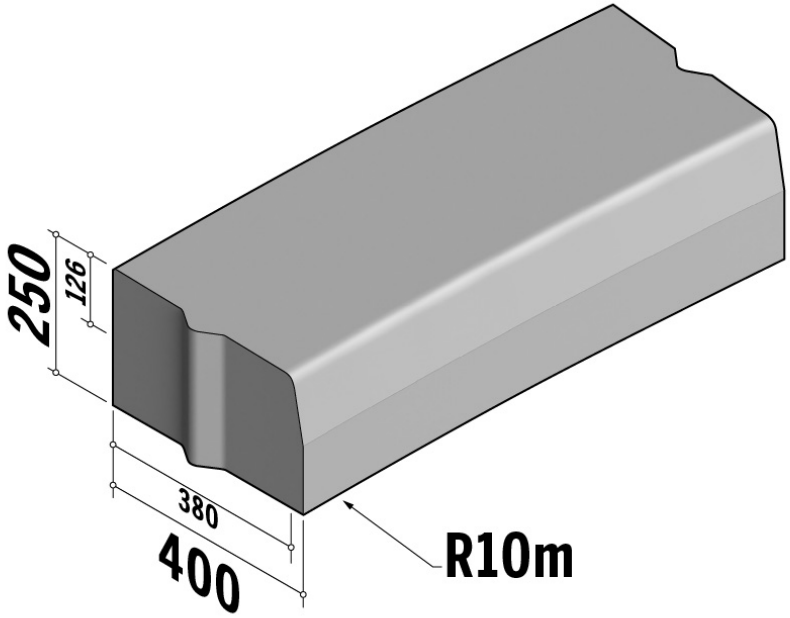

Active Travel Kerbs are available in a range of colours, finishes and materials.

Specification & technical data is indicative and subject to change. Images are for illustrative purposes only, details may vary. Some data may vary according to colour / material / finish variation.