hardscapeproducts.co.uk
01204 565 500
products@hardscape.co.uk

Highway 260-300x500

260-300x500 | Straight | L-1000 | Half-Battered | VB

SPECIFICATION

Highway 260-300x500 | 260-300x500 | Straight | L-1000 | Half-Battered | VB

SKU: ATK-HWN-003-6332

Material	Concrete, Kellen
Finish	Standard Wet Cast, Lavaro
Size	260-300(w) x 500(d) x 1000(l)
Weight Per Unit	340kg
Manufacturing Standard	BS EN 1340:2003
Density	2350 kg/m³
GWP (total) kgCO2e	36.23 kgCO2e/unit
Dutch Ref.	TROTTOIRBANDEN-26-30x50xL100-VB
Type	Straight
End Style	VB
Profile	260-300x500
Position	-
Face	Half-Battered
Face Angle	82°
Return Angle	-
Radius	-
Number per 360	-
Slope Angle	-
Slope Gradient	-

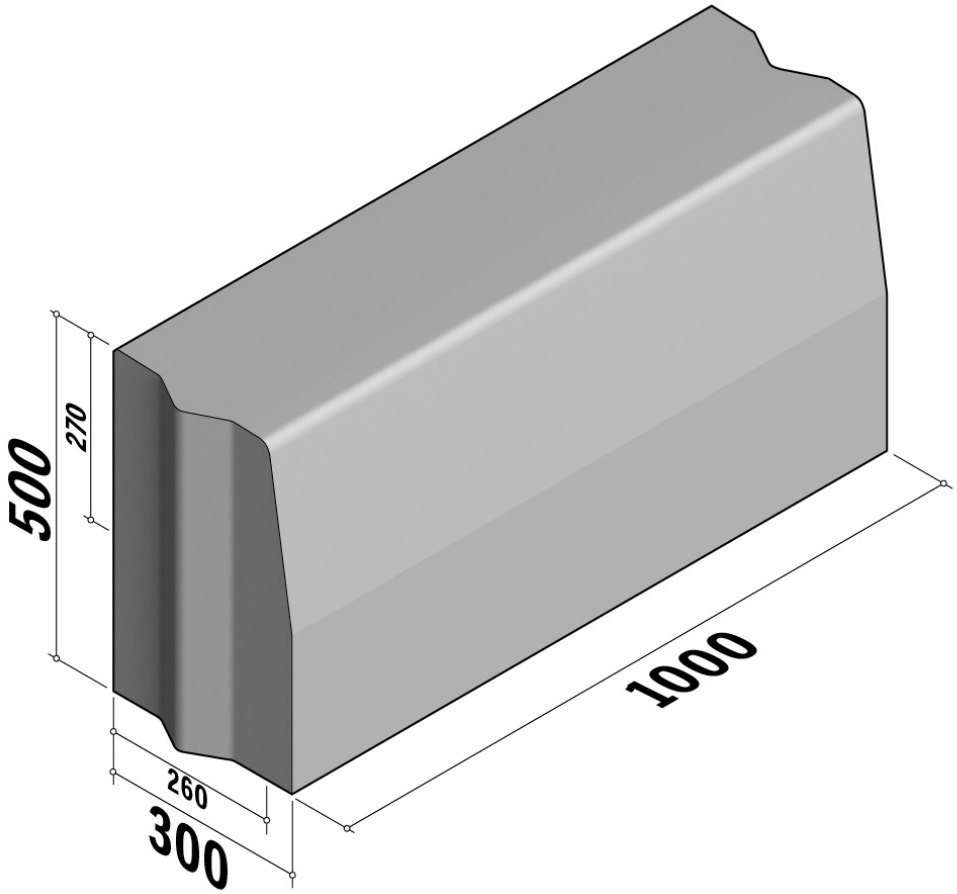

Active Travel Kerbs are available in a range of colours, finishes and materials.

Specification & technical data is indicative and subject to change. Images are for illustrative purposes only, details may vary. Some data may vary according to colour / material / finish variation.