Civils & Highways / Active Travel Kerbs / Highway / Highway 230-250

# Highway 230-250x200

## 230-250x200 | Return Corner | L-450 | External | 90° | Half-Battered | VB

### SPECIFICATION

**Highway 230-250x200 | 230-250x200 | Return Corner | L-450 | External | 90° | Half-Battered | VB**

**SKU:** ATK-HWM-001-6312

| | |
|---|---|
| **Material** | Concrete, Kellen |
| **Finish** | Standard, Lavaro |
| **Size** | 230-250(w) x 200(d) x 450(l) |
| **Weight Per Unit** | 71.8kg |
| **Manufacturing Standard** | BS EN 1340:2003 |
| **Density** | 2350 kg/m³ |
| **GWP (total) kgCO2e** | 7.65 kgCO2e/unit |
| **Dutch Ref.** | HOEKSTUKKEN-23-25x20xL45-90°-VB |
| **Type** | Return Corner External |
| **End Style** | VB |
| **Profile** | 230-250x200 |
| **Position** | - |
| **Face** | Half-Battered |
| **Face Angle** | 81° |
| **Return Angle** | 90° |
| **Radius** | - |
| **Number per 360** | - |
| **Slope Angle** | - |
| **Slope Gradient** | - |

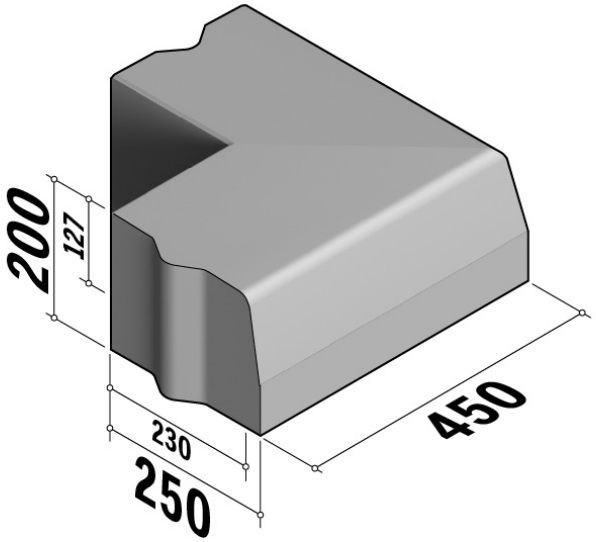


Active Travel Kerbs are available in a range of colours, finishes and materials.



*Specification & technical data is indicative and subject to change. Images are for illustrative purposes only, details may vary. Some data may vary according to colour / material / finish variation.*