Civils & Highways / Active Travel Kerbs / Highway / Highway 230-250

Highway 230-250x200

230-250x200 | Radius | L-785 | External | 10m | Half-Battered | VB

SPECIFICATION

Highway 230-250x200 | 230-250x200 | Radius | L-785 | External | 10m | Half-Battered | VB

SKU: ATK-HWM-001-6309

Material	Concrete, Kellen
Finish	Standard, Lavaro
Size	230-250(w) x 200(d) x 785(l)
Weight Per Unit	88kg
Manufacturing Standard	BS EN 1340:2003
Density	2350 kg/m³
GWP (total) kgCO2e	9.38 kgCO2e/unit
Dutch Ref.	TROTTOIRBOCHTBANDEN-23-25x20xL78.5-10m-VB
Type	Radius External
End Style	VB
Profile	230-250x200
Position	-
Face	Half-Battered
Face Angle	81°
Return Angle	-
Radius	10m
Number per 360	80
Slope Angle	-
Slope Gradient	-

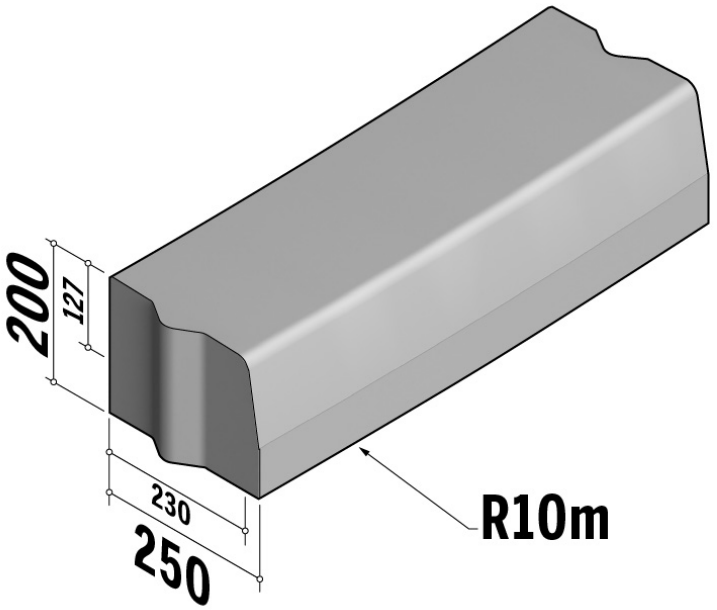

Active Travel Kerbs are available in a range of colours, finishes and materials.

Specification & technical data is indicative and subject to change. Images are for illustrative purposes only, details may vary. Some data may vary according to colour / material / finish variation.