hardscapeproducts.co.uk
01204 565 500
products@hardscape.co.uk

Highway 190-220x160

190-220x160 | Straight | L-1000 | Splay | VB

SPECIFICATION

Highway 190-220x160 | 190-220x160 | Straight | L-1000 | Splay | VB

SKU: ATK-HWH-001-6278

Material	Concrete, Kellen
Finish	Standard, Optiflex, Lavaro
Size	190-220(w) x 160(d) x 1000(l)
Weight Per Unit	85kg
Manufacturing Standard	BS EN 1340:2003
Density	2350 kg/m³
GWP (total) kgCO2e	9.06 kgCO2e/unit
Dutch Ref.	TROTTOIRBANDEN-19-22x16xL100-VB
Type	Straight
End Style	VB
Profile	190-220x160
Position	-
Face	Splay
Face Angle	49°
Return Angle	-
Radius	-
Number per 360	-
Slope Angle	-
Slope Gradient	-

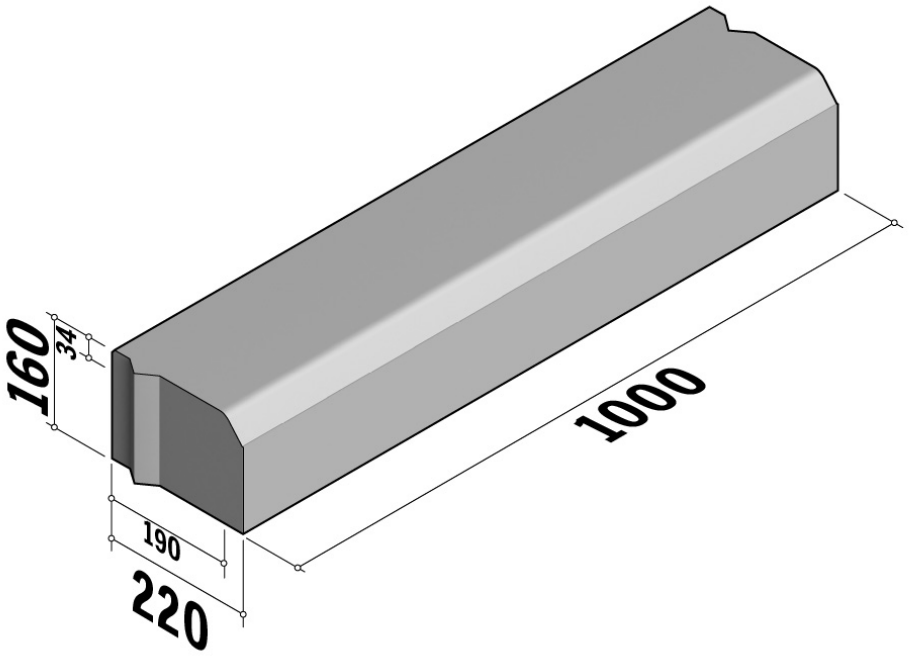

Active Travel Kerbs are available in a range of colours, finishes and materials.

Specification & technical data is indicative and subject to change. Images are for illustrative purposes only, details may vary. Some data may vary according to colour / material / finish variation.