Civils & Highways / Active Travel Kerbs / Highway / Highway 110-220

Highway 110-220x160

110-220x160 | Return Point | 145° | 0.22m | Splay | VB

SPECIFICATION

Highway 110-220x160 | 110-220x160 | Return Point | 145° | 0.22m | Splay | VB

SKU: ATK-HWG-002-6155

Material	Concrete, Kellen
Finish	Standard Wet Cast, Optiflex, Lavaro
Size	110-220(w) x 160(d)
Weight Per Unit	48.82kg
Manufacturing Standard	BS EN 1340:2003
Density	2350 kg/m³
GWP (total) kgCO2e	5.2 kgCO2e/unit
Dutch Ref.	PUNTSTUKKEN-11-22x16-0.22m-145°-VB
Type	Return Point
End Style	VB
Profile	110-220x160
Position	-
Face	Splay
Face Angle	48°
Return Angle	145°
Radius	0.22m
Number per 360	-
Slope Angle	-
Slope Gradient	-

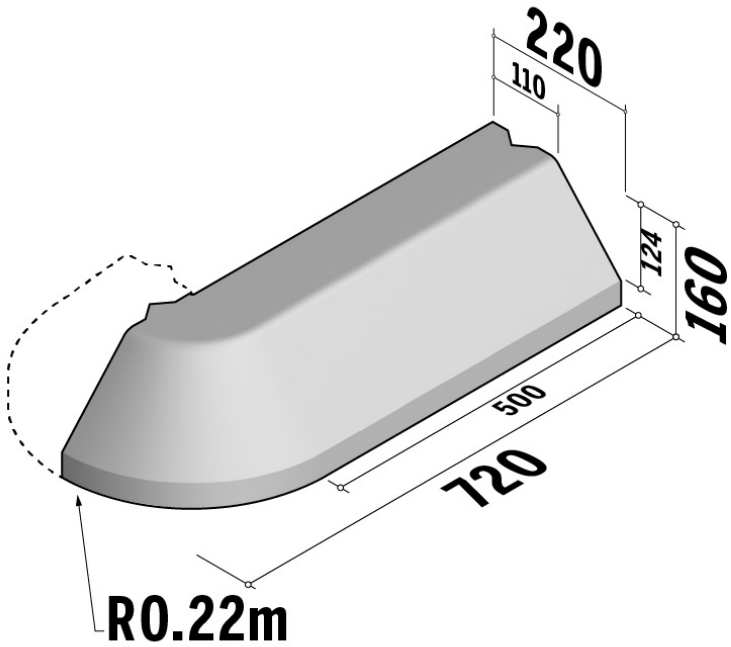

Available in 5° increments

Active Travel Kerbs are available in a range of colours, finishes and materials.

Specification & technical data is indicative and subject to change. Images are for illustrative purposes only, details may vary. Some data may vary according to colour / material / finish variation.