hardscapeproducts.co.uk
01204 565 500
products@hardscape.co.uk

Highway 110-220x130

110-220x130 | Return Point | 140° | 0.22m | Splay | VB

SPECIFICATION

Highway 110-220x130 | 110-220x130 | Return Point | 140° | 0.22m | Splay | VB

SKU: ATK-HWG-001-6119

Material	Concrete, Kellen
Finish	Standard Wet Cast, Optiflex, Lavaro
Size	110-220(w) x 130(d)
Weight Per Unit	10.88kg
Manufacturing Standard	BS EN 1340:2003
Density	2350 kg/m³
GWP (total) kgCO2e	1.16 kgCO2e/unit
Dutch Ref.	PUNTSTUKKEN-11-22x13-0.22m-140°-VB
Type	Return Point
End Style	VB
Profile	110-220x130
Position	-
Face	Splay
Face Angle	48°
Return Angle	140°
Radius	0.22m
Number per 360	-
Slope Angle	-
Slope Gradient	-

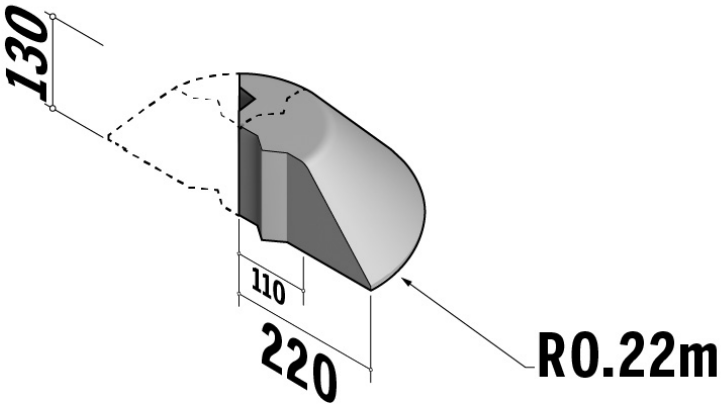

Available in 5° increments

Active Travel Kerbs are available in a range of colours, finishes and materials.

Specification & technical data is indicative and subject to change. Images are for illustrative purposes only, details may vary. Some data may vary according to colour / material / finish variation.