hardscapeproducts.co.uk
01204 565 500
products@hardscape.co.uk





# Highway 110-220x130

## 110-220x130 | Radius | L-785 | External | 1.5m | Splay | VB

### SPECIFICATION

**Highway 110-220x130 | 110-220x130 | Radius | L-785 | External | 1.5m | Splay | VB**
**SKU:** ATK-HWG-001-6089

| | |
|---|---|
| **Material** | Concrete, Kellen |
| **Finish** | Standard Wet Cast, Optiflex, Lavaro |
| **Size** | 110-220(w) x 130(d) x 785(l) |
| **Weight Per Unit** | 36.6kg |
| **Manufacturing Standard** | BS EN 1340:2003 |
| **Density** | 2350 kg/m³ |
| **GWP (total) kgCO2e** | 3.9 kgCO2e/unit |
| **Dutch Ref.** | TROTTOIRBOCHTBANDEN-11-22x13xL78.5-1.5m-VB |
| **Type** | Radius External |
| **End Style** | VB |
| **Profile** | 110-220x130 |
| **Position** | - |
| **Face** | Splay |
| **Face Angle** | 48° |
| **Return Angle** | - |
| **Radius** | 1.5m |
| **Number per 360** | 12 |
| **Slope Angle** | - |
| **Slope Gradient** | - |

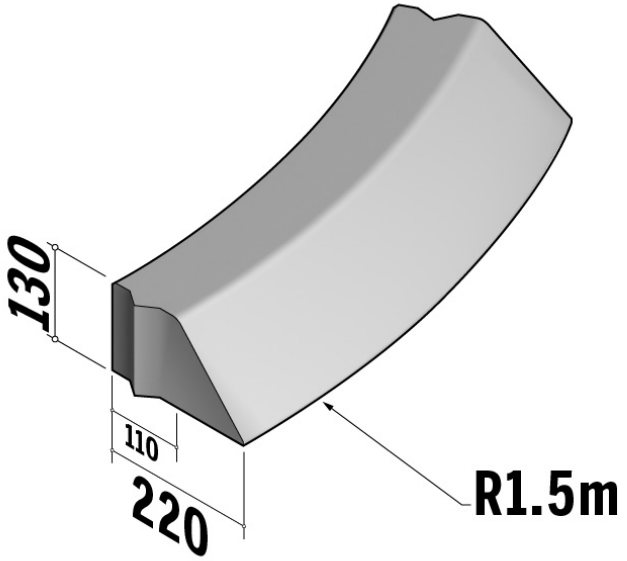


Active Travel Kerbs are available in a range of colours, finishes and materials.



*Specification & technical data is indicative and subject to change. Images are for illustrative purposes only, details may vary. Some data may vary according to colour / material / finish variation.*