Civils & Highways / Active Travel Kerbs / Highway / Highway 180-200

Highway 180-200x250 VB

180-200x250 VB | Radius | L-785 | External | 2m | Half-Battered | VB

SPECIFICATION

Highway 180-200x250 VB | 180-200x250 VB | Radius | L-785 | External | 2m | Half-Battered | VB

SKU: ATK-HWC-008-5997

Material	Concrete, Kellen
Finish	Standard, Optiflex, Lavaro, Metallo
Size	180-200(w) x 250(d) x 785(l)
Weight Per Unit	87.63kg
Manufacturing Standard	BS EN 1340:2003
Density	2350 kg/m³
GWP (total) kgCO2e	9.34 kgCO2e/unit
Dutch Ref.	TROTTOIRBOCHTBANDEN-18-20x25xL78.5-2m-VB
Type	Radius External
End Style	VB
Profile	180-200x250
Position	-
Face	Half-Battered
Face Angle	81°
Return Angle	-
Radius	2m
Number per 360	16
Slope Angle	-
Slope Gradient	-

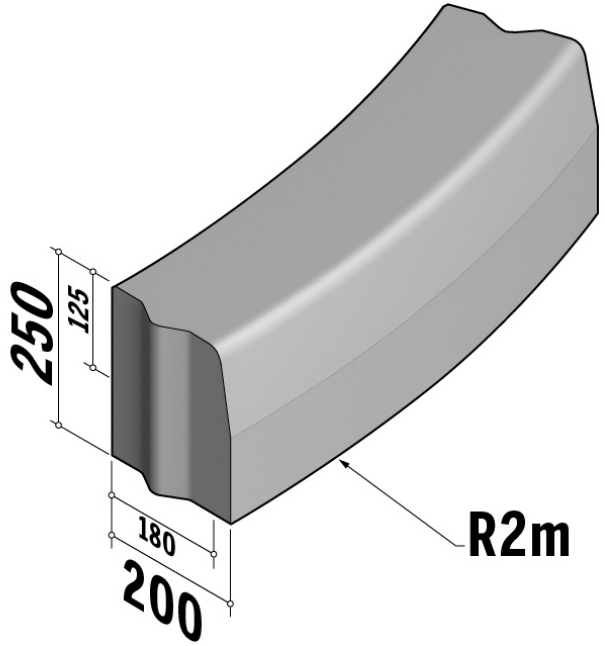

Active Travel Kerbs are available in a range of colours, finishes and materials.

Specification & technical data is indicative and subject to change. Images are for illustrative purposes only, details may vary. Some data may vary according to colour / material / finish variation.