HARDSCAPE PRODUCTS

hardscapeproducts.co.uk
01204 565 500
products@hardscape.co.uk

Active Travel Kerbs from HARDSCAPE

Civils & Highways / Active Travel Kerbs / Highway / Highway 180-200

Highway 180-200x250 HD

180-200x250 HD | End Transition | to 200x120 | L-1000 | Left | Half-Battered | HD

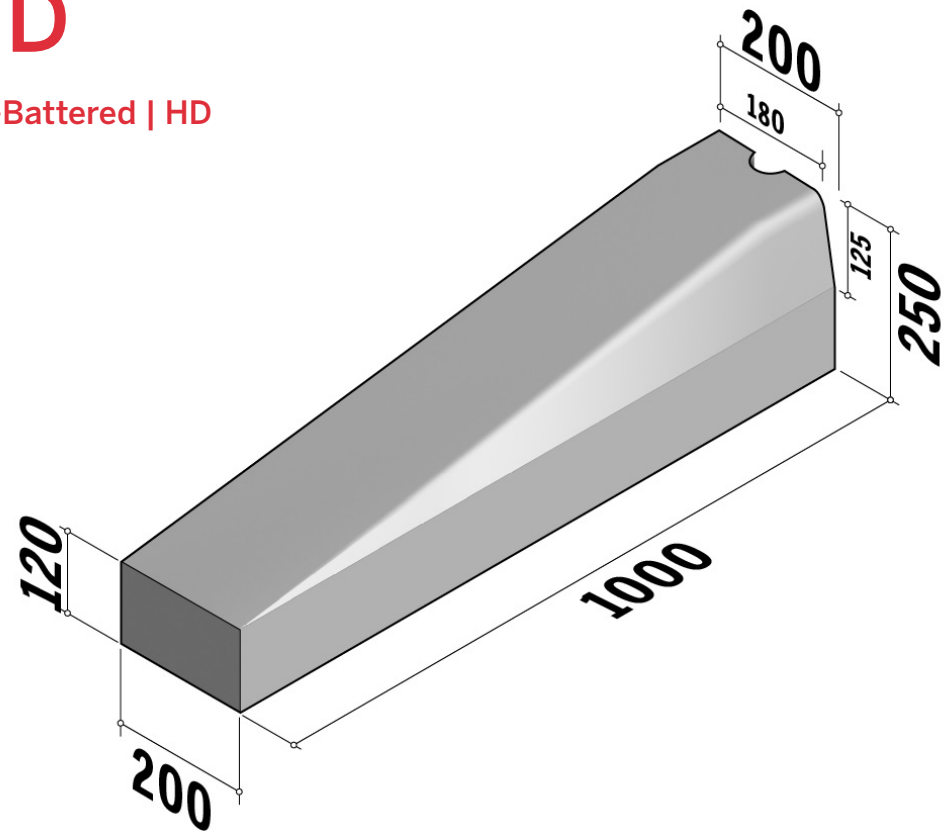

SPECIFICATION

Highway 180-200x250 HD | 180-200x250 HD | End Transition | to 200x120 | L-1000 | Left | Half-Battered | HD

SKU: ATK-HWC-007-5989

Material	Concrete, Kellen
Finish	Standard Wet Cast, Lavaro
Size	180-200(w) x 250(d) x 1000(l)
Weight Per Unit	76kg
Manufacturing Standard	BS EN 1340:2003
Density	2350 kg/m³
GWP (total) kgCO2e	8.1 kgCO2e/unit
Dutch Ref.	EINDVERLOOPBANDEN-18-20x25_20x12xL100-HD-LINKS
Type	End Transition
End Style	HD
Profile	180-200x250
Position	Left
Face	Half-Battered
Face Angle	81°
Return Angle	-
Radius	-
Number per 360	-
Slope Angle	-
Slope Gradient	-

Active Travel Kerbs are available in a range of colours, finishes and materials.

View product online at : https://hardscape.co.uk/product/Highway-180-200x250-HD-180-200x250-HD-End-Transition-to-200x120-L-1000-Left-Half-Battered-HD/

Specification & technical data is indicative and subject to change. Images are for illustrative purposes only, details may vary. Some data may vary according to colour / material / finish variation.