Civils & Highways / Active Travel Kerbs / Highway / Highway 180-200

# Highway 180-200x250 HD

## 180-200x250 HD | Return Point | 145° | 0.5m | Half-Battered | HD

### SPECIFICATION

**Highway 180-200x250 HD | 180-200x250 HD | Return Point | 145° | 0.5m | Half-Battered | HD**

**SKU:** ATK-HWC-007-5948

| | |
|---|---|
| **Material** | Concrete, Kellen |
| **Finish** | Standard Wet Cast, Lavaro |
| **Size** | 180-200(w) x 250(d) |
| **Weight Per Unit** | 135.33kg |
| **Manufacturing Standard** | BS EN 1340:2003 |
| **Density** | 2350 kg/m³ |
| **GWP (total) kgCO2e** | 14.42 kgCO2e/unit |
| **Dutch Ref.** | PUNTSTUKKEN-18-20x25-0.5m-145°-HD |
| **Type** | Return Point |
| **End Style** | HD |
| **Profile** | 180-200x250 |
| **Position** | - |
| **Face** | Half-Battered |
| **Face Angle** | 81° |
| **Return Angle** | 145° |
| **Radius** | 0.5m |
| **Number per 360** | - |
| **Slope Angle** | - |
| **Slope Gradient** | - |

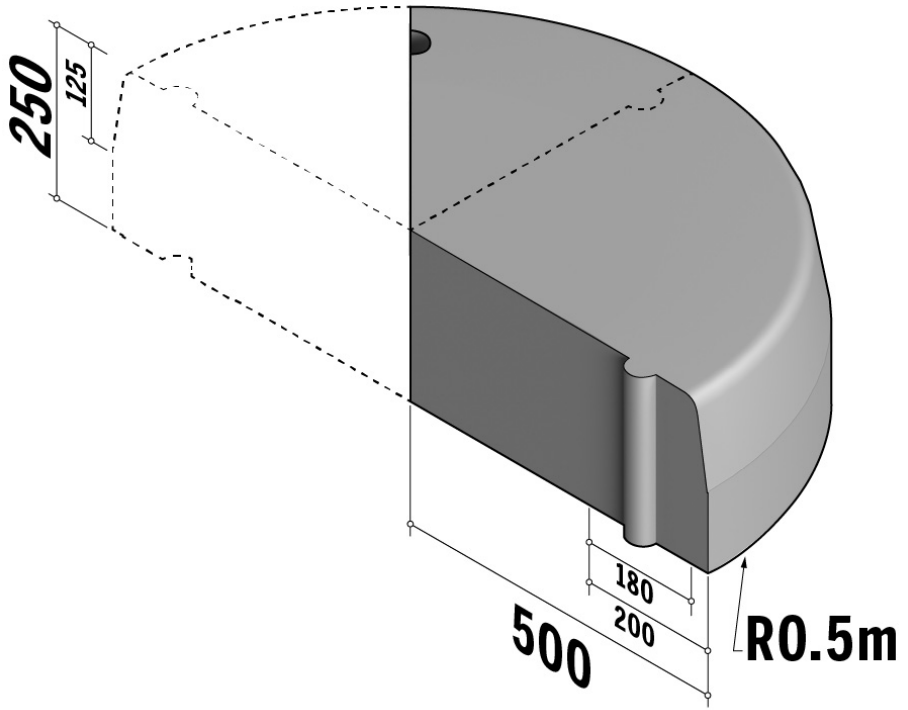


**Available in 5° increments**

Active Travel Kerbs are available in a range of colours, finishes and materials.



*Specification & technical data is indicative and subject to change. Images are for illustrative purposes only, details may vary. Some data may vary according to colour / material / finish variation.*