hardscapeproducts.co.uk
01204 565 500
products@hardscape.co.uk

Highway 180-200x250 HD

180-200x250 HD | Return Radial | Internal | 90° | 0.3m | Half-Battered | HD

SPECIFICATION

Highway 180-200x250 HD | 180-200x250 HD | Return Radial | Internal | 90° | 0.3m | Half-Battered | HD

SKU: ATK-HWC-007-5897

Material	Concrete, Kellen
Finish	Standard, Lavaro
Size	180-200(w) x 250(d)
Weight Per Unit	89.06kg
Manufacturing Standard	BS EN 1340:2003
Density	2350 kg/m³
GWP (total) kgCO2e	9.49 kgCO2e/unit
Dutch Ref.	HOEKBLOKKEN-18-20x25-0.3m-90°-HD-inw
Type	Return Radial Internal
End Style	HD
Profile	180-200x250
Position	-
Face	Half-Battered
Face Angle	81°
Return Angle	90°
Radius	0.3m
Number per 360	-
Slope Angle	-
Slope Gradient	-

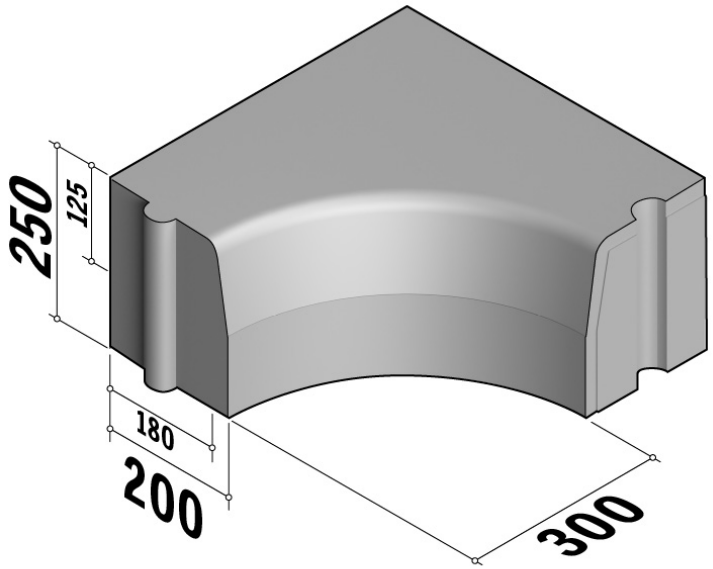

Active Travel Kerbs are available in a range of colours, finishes and materials.

Specification & technical data is indicative and subject to change. Images are for illustrative purposes only, details may vary. Some data may vary according to colour / material / finish variation.