Civils & Highways / Active Travel Kerbs / Highway / Highway 180-200

Highway 180-200x200 VB

180-200x200 VB | Return Point | 170° | 0.275m | Half-Battered | VB

SPECIFICATION

Highway 180-200x200 VB | 180-200x200 VB | Return Point | 170° | 0.275m | Half-Battered | VB

SKU: ATK-HWC-006-5834

Material	Concrete, Kellen
Finish	Standard Wet Cast, Lavaro, Metallo
Size	180-200(w) x 200(d)
Weight Per Unit	35.7kg
Manufacturing Standard	BS EN 1340:2003
Density	2350 kg/m³
GWP (total) kgCO2e	3.8 kgCO2e/unit
Dutch Ref.	PUNTSTUKKEN-18-20x20-0.275m-170°-VB
Type	Return Point
End Style	VB
Profile	180-200x200
Position	-
Face	Half-Battered
Face Angle	81°
Return Angle	170°
Radius	0.275m
Number per 360	-
Slope Angle	-
Slope Gradient	-

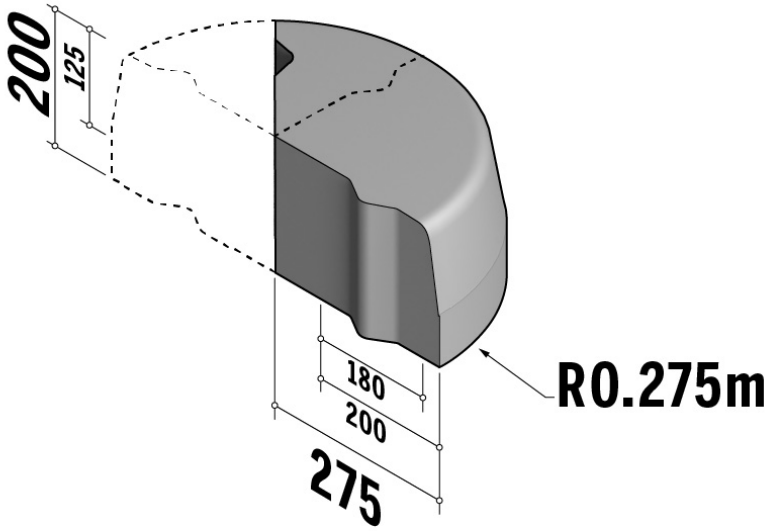

Available in 5° increments

Active Travel Kerbs are available in a range of colours, finishes and materials.

Specification & technical data is indicative and subject to change. Images are for illustrative purposes only, details may vary. Some data may vary according to colour / material / finish variation.