Civils & Highways / Active Travel Kerbs / Highway / Highway 180-200

Highway 180-200x200 HD

180-200x200 HD | Radius | L-785 | Internal | 6m | Half-Battered | HD

SPECIFICATION

Highway 180-200x200 HD | 180-200x200 HD | Radius | L-785 | Internal | 6m | Half-Battered | HD

SKU: ATK-HWC-005-5750

Material	Concrete
Finish	Standard
Size	180-200(w) x 200(d) x 785(l)
Weight Per Unit	74.18kg
Manufacturing Standard	BS EN 1340:2003
Density	2350 kg/m³
GWP (total) kgCO2e	7.9 kgCO2e/unit
Dutch Ref.	TROTTOIRBOCHTBANDEN-18-20x20xL78.5-6m-HD-inw
Type	Radius Internal
End Style	HD
Profile	180-200x200
Position	-
Face	Half-Battered
Face Angle	81°
Return Angle	-
Radius	6m
Number per 360	48
Slope Angle	-
Slope Gradient	-

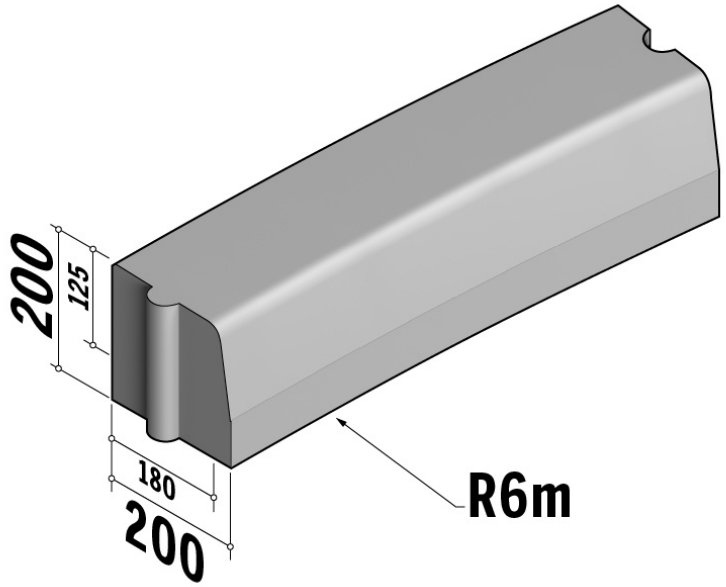

Active Travel Kerbs are available in a range of colours, finishes and materials.

Specification & technical data is indicative and subject to change. Images are for illustrative purposes only, details may vary. Some data may vary according to colour / material / finish variation.