Civils & Highways / Active Travel Kerbs / Highway / Highway 180-200

Highway 180-200x160 HD

180-200x160 HD | Return Point | 105° | 0.25m | Half-Battered | HD

SPECIFICATION

Highway 180-200x160 HD | 180-200x160 HD | Return Point | 105° | 0.25m | Half-Battered | HD

SKU: ATK-HWC-003-5689

Material	Concrete, Kellen
Finish	Standard Wet Cast, Optiflex, Lavaro
Size	180-200(w) x 160(d)
Weight Per Unit	15.16kg
Manufacturing Standard	BS EN 1340:2003
Density	2350 kg/m³
GWP (total) kgCO2e	1.62 kgCO2e/unit
Dutch Ref.	PUNTSTUKKEN-18-20x16-0.25m-105°-HD
Type	Return Point
End Style	HD
Profile	180-200x160
Position	-
Face	Half-Battered
Face Angle	81°
Return Angle	105°
Radius	0.25m
Number per 360	-
Slope Angle	-
Slope Gradient	-

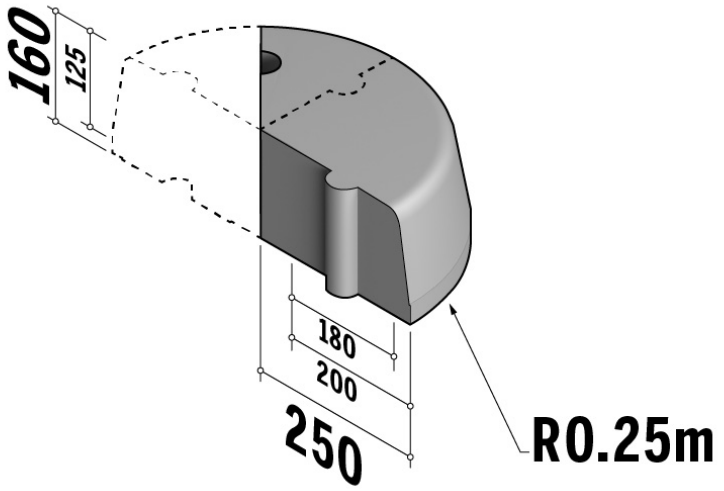

Available in 5° increments

Active Travel Kerbs are available in a range of colours, finishes and materials.

Specification & technical data is indicative and subject to change. Images are for illustrative purposes only, details may vary. Some data may vary according to colour / material / finish variation.