Civils & Highways / Active Travel Kerbs / Highway / Highway 170-200

Highway 170-200x400

170-200x400 | Radius | L-785 | Internal | 3m | Half-Battered | VB

SPECIFICATION

Highway 170-200x400 | 170-200x400 | Radius | L-785 | Internal | 3m | Half-Battered | VB

SKU: ATK-HWB-001-5652

Material	Concrete, Kellen
Finish	Standard Wet Cast, Lavaro, Metallo
Size	170-200(w) x 400(d) x 785(l)
Weight Per Unit	146.4kg
Manufacturing Standard	BS EN 1340:2003
Density	2350 kg/m³
GWP (total) kgCO2e	15.6 kgCO2e/unit
Dutch Ref.	TROTTOIRBOCHTBANDEN-17-20x40xL78.5-3m-VB-inw
Type	Radius Internal
End Style	VB
Profile	170-200x400
Position	-
Face	Half-Battered
Face Angle	81°
Return Angle	-
Radius	3m
Number per 360	24
Slope Angle	-
Slope Gradient	-

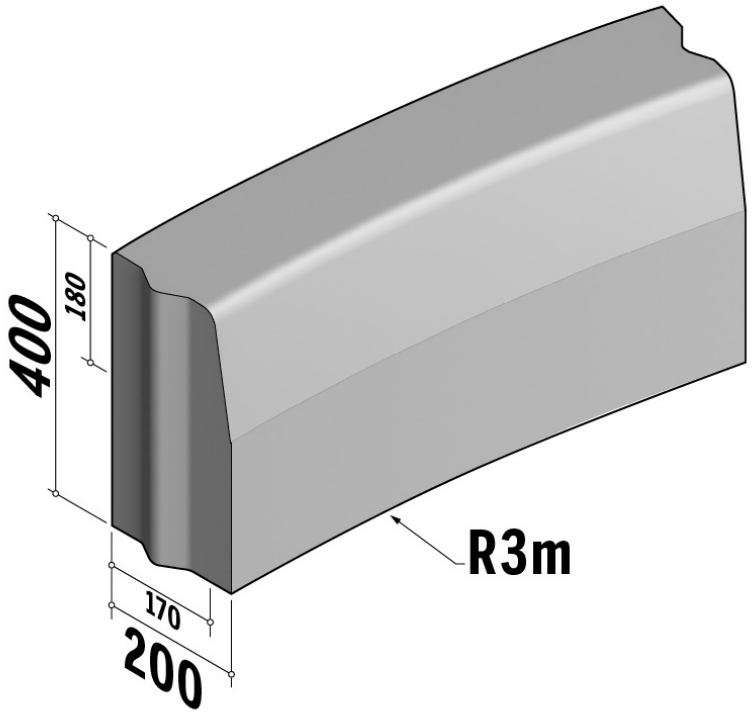

Active Travel Kerbs are available in a range of colours, finishes and materials.

Specification & technical data is indicative and subject to change. Images are for illustrative purposes only, details may vary. Some data may vary according to colour / material / finish variation.