Civils & Highways / Active Travel Kerbs / Entry Kerb

Entry Kerb Universal

750x200x500 SQ | L-500 | Right | Half-Battered | SQ

SPECIFICATION

Entry Kerb Universal | 750x200 | L-500 | Right | Half-Battered | SQ

SKU: ATK-HWA-009-5636

Material	Concrete, Kellen
Finish	Standard, Lavaro
Size	750(w) x 200(d) x 500(l)
Weight Per Unit	130kg
Manufacturing Standard	BS EN 1340:2003
Density	2350 kg/m³
GWP (total) kgCO2e	13.85 kgCO2e/unit
Dutch Ref.	INRITBANDEN-75x20xL50-VL-RECHTS
Type	-
End Style	SQ
Profile	750x200
Position	Right
Face	Half-Battered
Face Angle	81°
Return Angle	-
Radius	-
Number per 360	-
Slope Angle	7°
Slope Gradient	1:8.3

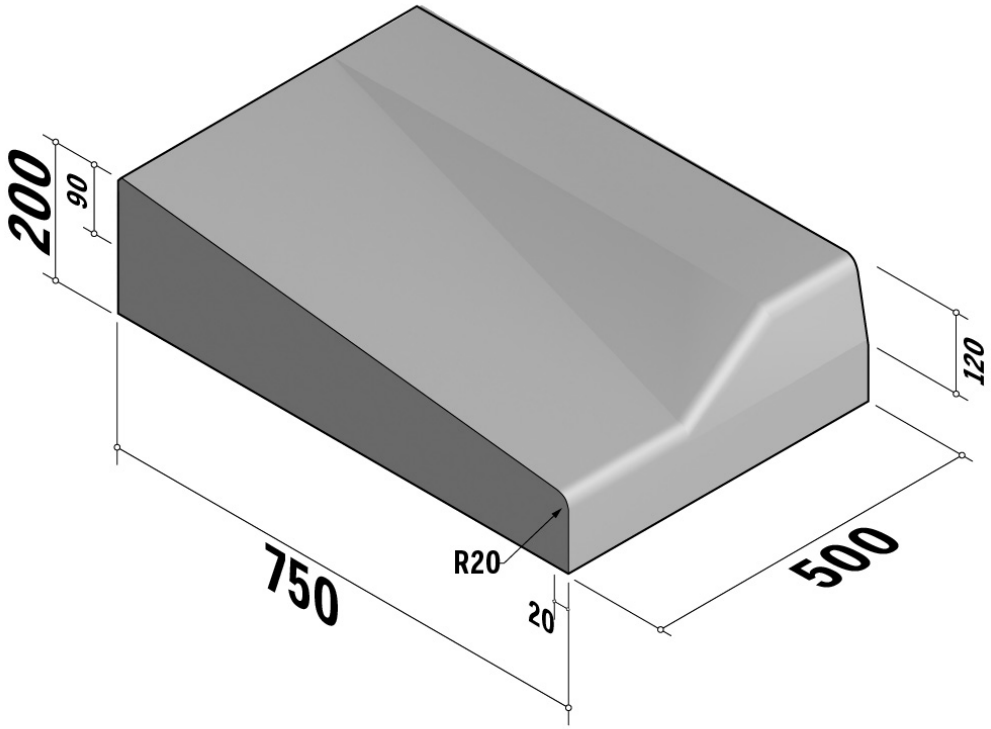

Active Travel Kerbs are available in a range of colours, finishes and materials.

Specification & technical data is indicative and subject to change. Images are for illustrative purposes only, details may vary. Some data may vary according to colour / material / finish variation.