Civils & Highways / Active Travel Kerbs / Highway / Highway 130-150

Highway 130-150x250 VB

130-150x250 VB | Drop Transition | to 150x130 | L-1000 | Left | Half-Battered | VB

SPECIFICATION

Highway 130-150x250 VB | 130-150x250 VB | Drop Transition | to 150x130 | L-1000 | Left | Half-Battered | VB

SKU: ATK-HWA-006-5587

Material	Concrete, Kellen
Finish	Standard Wet Cast, Optiflex, Lavaro, Metallo
Size	130-150(w) x 250(d) x 1000(l)
Weight Per Unit	65.12kg
Manufacturing Standard	BS EN 1340:2003
Density	2350 kg/m³
GWP (total) kgCO2e	6.94 kgCO2e/unit
Dutch Ref.	INRITVERLOOPBANDEN-13-15x25_15x13xL100-VB-LINKS
Type	Drop Transition
End Style	VB
Profile	130-150x250
Position	Left
Face	Half-Battered
Face Angle	81°
Return Angle	-
Radius	-
Number per 360	-
Slope Angle	-
Slope Gradient	-

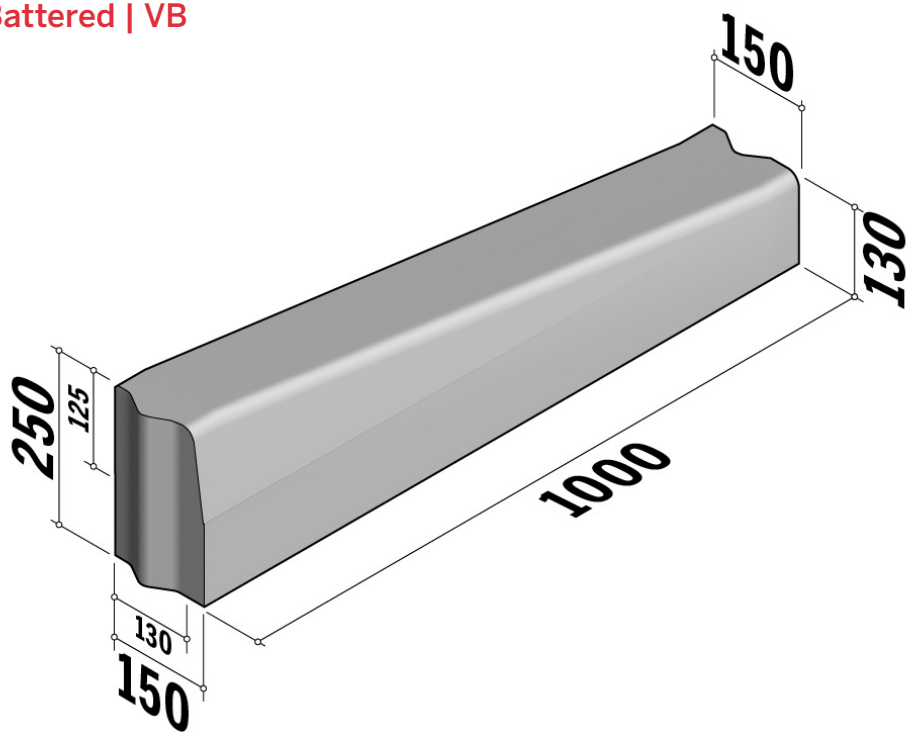

Active Travel Kerbs are available in a range of colours, finishes and materials.

Specification & technical data is indicative and subject to change. Images are for illustrative purposes only, details may vary. Some data may vary according to colour / material / finish variation.