hardscapeproducts.co.uk
01204 565 500
products@hardscape.co.uk

Highway 130-150x250 HD

130-150x250 HD | Transition | to 150x250 | L-1000 | Half-Battered | HDHD

SPECIFICATION

Highway 130-150x250 HD | 130-150x250 HD | Transition | to 150x250 | L-1000 | Half-Battered | HDHD

SKU: ATK-HWA-005-5508

Material	Concrete, Kellen
Finish	Standard Wet Cast, Lavaro
Size	130-150(w) x 250(d) x 1000(l)
Weight Per Unit	87.1kg
Manufacturing Standard	BS EN 1340:2003
Density	2350 kg/m³
GWP (total) kgCO2e	9.28 kgCO2e/unit
Dutch Ref.	VERLOOPBANDEN-13-15x25_15x25xL100-HD
Type	Transition
End Style	HDHD
Profile	130-150x250
Position	-
Face	Half-Battered_Flat
Face Angle	81°
Return Angle	-
Radius	-
Number per 360	-
Slope Angle	-
Slope Gradient	-

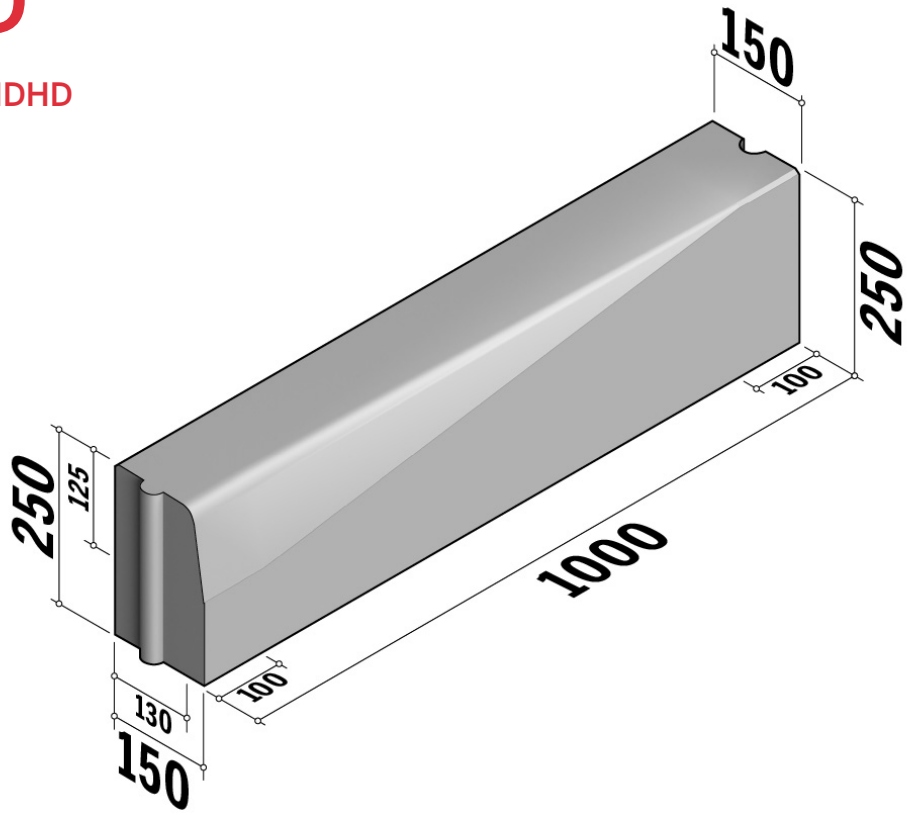

Active Travel Kerbs are available in a range of colours, finishes and materials.

Specification & technical data is indicative and subject to change. Images are for illustrative purposes only, details may vary. Some data may vary according to colour / material / finish variation.