hardscapeproducts.co.uk
01204 565 500
products@hardscape.co.uk





# Highway 130-150x250 HD

## 130-150x250 HD | Transition | to 30-80x200 | L-1000 | Half-Battered | HDHD

### SPECIFICATION

**Highway 130-150x250 HD | 130-150x250 HD | Transition | to 30-80x200 | L-1000 | Half-Battered | HDHD**

**SKU:** ATK-HWA-005-5499

| | |
|---|---|
| **Material** | Concrete, Kellen |
| **Finish** | Standard Wet Cast, Lavaro |
| **Size** | 130-150(w) x 250(d) x 1000(l) |
| **Weight Per Unit** | 64kg |
| **Manufacturing Standard** | BS EN 1340:2003 |
| **Density** | 2350 kg/m³ |
| **GWP (total) kgCO2e** | 6.82 kgCO2e/unit |
| **Dutch Ref.** | VERLOOPBANDEN-13-15x25_3-8x20xL100-HD |
| **Type** | Transition |
| **End Style** | HDHD |
| **Profile** | 130-150x250 |
| **Position** | - |
| **Face** | Half-Battered_Splay |
| **Face Angle** | 81° |
| **Return Angle** | - |
| **Radius** | - |
| **Number per 360** | - |
| **Slope Angle** | - |
| **Slope Gradient** | - |

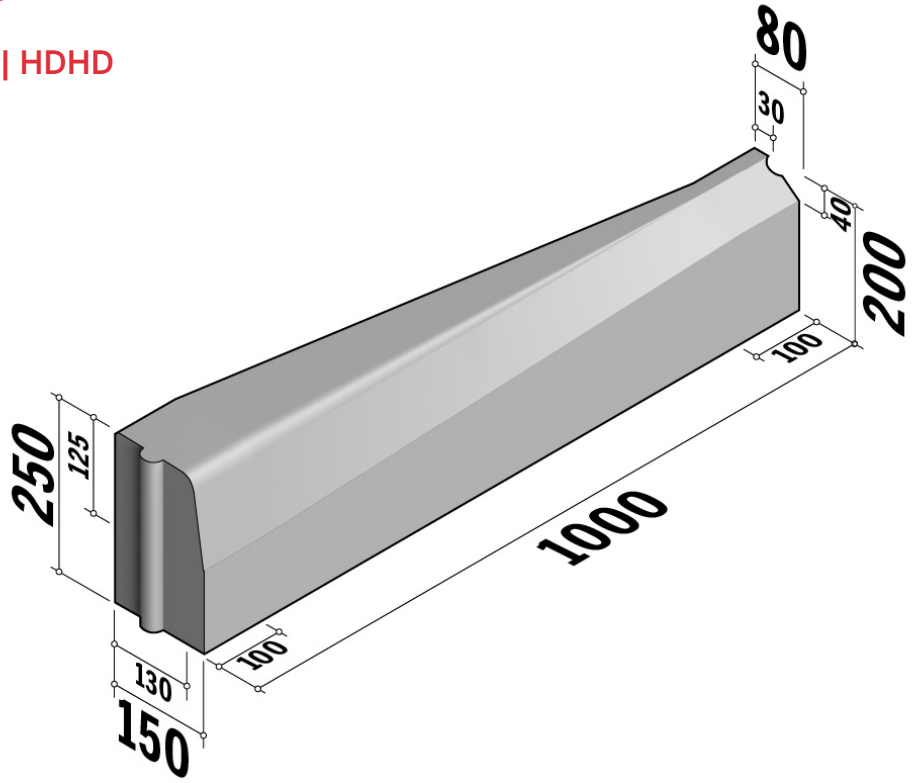


Active Travel Kerbs are available in a range of colours, finishes and materials.



*Specification & technical data is indicative and subject to change. Images are for illustrative purposes only, details may vary. Some data may vary according to colour / material / finish variation.*