hardscapeproducts.co.uk
01204 565 500
products@hardscape.co.uk

Highway 130-150x250 HD

130-150x250 HD | Return Corner | L-320 | External | 135° | Half-Battered | HD

SPECIFICATION

Highway 130-150x250 HD | 130-150x250 HD | Return Corner | L-320 | External | 135° | Half-Battered | HD

SKU: ATK-HWA-005-5414

Material	Concrete, Kellen
Finish	Standard, Optiflex, Lavaro
Size	130-150(w) x 250(d) x 320(l)
Weight Per Unit	48.5kg
Manufacturing Standard	BS EN 1340:2003
Density	2350 kg/m³
GWP (total) kgCO2e	5.17 kgCO2e/unit
Dutch Ref.	HOEKSTUKKEN-13-15x25xL32-135°-HD
Type	Return Corner External
End Style	HD
Profile	130-150x250
Position	-
Face	Half-Battered
Face Angle	81°
Return Angle	135°
Radius	-
Number per 360	-
Slope Angle	-
Slope Gradient	-

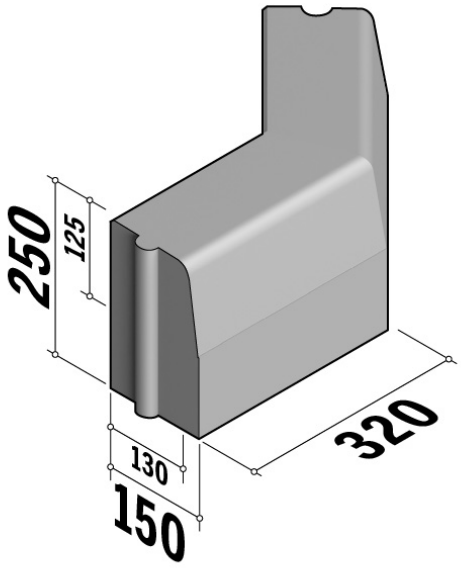

Active Travel Kerbs are available in a range of colours, finishes and materials.

Specification & technical data is indicative and subject to change. Images are for illustrative purposes only, details may vary. Some data may vary according to colour / material / finish variation.