Civils & Highways / Active Travel Kerbs / Highway / Highway 130-150

# Highway 130-150x250 HD

## 130-150x250 HD | Return Corner | L-325 | External | 90° | Half-Battered | HD

### SPECIFICATION

**Highway 130-150x250 HD | 130-150x250 HD | Return Corner | L-325 | External | 90° | Half-Battered | HD**

**SKU:** ATK-HWA-005-5413

| | |
|---|---|
| **Material** | Concrete, Kellen |
| **Finish** | Standard, Optiflex, Lavaro |
| **Size** | 130-150(w) x 250(d) x 325(l) |
| **Weight Per Unit** | 41.12kg |
| **Manufacturing Standard** | BS EN 1340:2003 |
| **Density** | 2350 kg/m³ |
| **GWP (total) kgCO2e** | 4.38 kgCO2e/unit |
| **Dutch Ref.** | HOEKSTUKKEN-13-15x25xL32.5-90°-HD |
| **Type** | Return Corner External |
| **End Style** | HD |
| **Profile** | 130-150x250 |
| **Position** | - |
| **Face** | Half-Battered |
| **Face Angle** | 81° |
| **Return Angle** | 90° |
| **Radius** | - |
| **Number per 360** | - |
| **Slope Angle** | - |
| **Slope Gradient** | - |

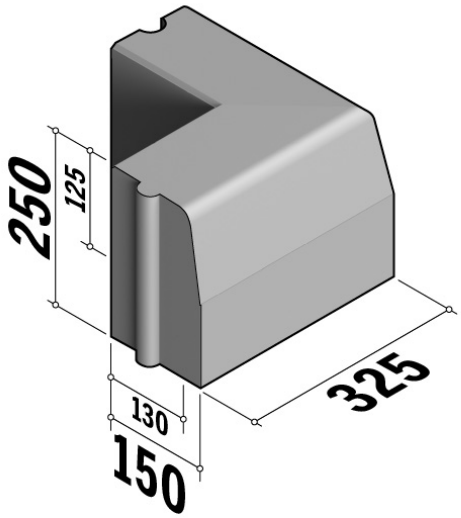


Active Travel Kerbs are available in a range of colours, finishes and materials.



*Specification & technical data is indicative and subject to change. Images are for illustrative purposes only, details may vary. Some data may vary according to colour / material / finish variation.*