Civils & Highways / Active Travel Kerbs / Highway / Highway 130-150

Highway 130-150x200 VB

130-150x200 VB | Transition | to 40-150x200 | L-500 | Half-Battered | VBVB

SPECIFICATION

Highway 130-150x200 VB | 130-150x200 VB | Transition | to 40-150x200 | L-500 | Half-Battered | VBVB

SKU: ATK-HWA-004-5379

Material	Concrete, Kellen
Finish	Standard Wet Cast, Lavaro
Size	130-150(w) x 200(d) x 500(l)
Weight Per Unit	100kg
Manufacturing Standard	BS EN 1340:2003
Density	2350 kg/m³
GWP (total) kgCO2e	10.66 kgCO2e/unit
Dutch Ref.	VERLOOPBANDEN-13-15x20_4-15x20xL50-VB
Type	Transition
End Style	VBVB
Profile	130-150x200
Position	-
Face	Half-Battered_Splay
Face Angle	81°
Return Angle	-
Radius	-
Number per 360	-
Slope Angle	-
Slope Gradient	-

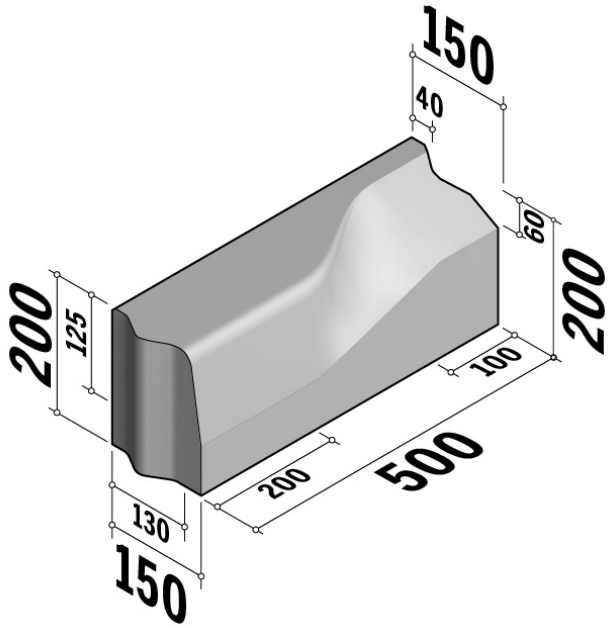

Active Travel Kerbs are available in a range of colours, finishes and materials.

Specification & technical data is indicative and subject to change. Images are for illustrative purposes only, details may vary. Some data may vary according to colour / material / finish variation.